Regular Council Meeting
AGENDA

Tuesday, March 14, 2017, 7:00 PM
Tecumseh Town Hall
www.tecumseh.ca

		Pages
1.	CALL TO ORDER - Mayor	
2.	MOMENT OF SILENCE	
3.	NATIONAL ANTHEM	
4.	ROLL CALL & DISCLOSURE OF PECUNIARY INTEREST	
5.	COUNCIL MINUTES	
a.	Special Council Meeting January 17, 2017	4 - 5
b.	Public Council Meeting February 28, 2017	6 - 8
c.	Regular Council Meeting February 28, 2017	9 - 20
6.	SUPPLEMENTARY AGENDA ADOPTION	
7.	DELEGATIONS	
a.	Tecumseh Fire and Rescue Services, Volunteer Firefighters Dan Redmond and Bassem Baalbaki Re: Ultimate Fun Firefighter Challenge	
b.	St. Clair Beach Optimist Club Re: Cheque Presentation to Tecumseh Fire Services for Summer Junior Fire Camp Overalls	
c.	Essex Region Conservation Authority, General Manager/Secretary-Treasurer Richard Wyma, & Chair Rick Fryer Re: 2016 Annual Report and 2017 Activities	21 - 24
8.	COMMUNICATIONS FOR INFORMATION	
a.	The Corporation of The United Townships of Head, Clara & Maria Re: Building Code Changes	25 - 31
b.	Essex County Agricultural Hall of Fame Re: Agricultural Hall of Fame Annual Meeting/Induction	32 - 32
c.	Ministry of Education Re: Pupil Accommodation Reviews and Support for Education in Rural and Remote Communities	33 - 38
d.	MPAC Re: Assessing Properties in Proximity to Industrial Wind Turbines	39 - 40
e.	MPAC Re: 2017 Municipal Stakeholder Research	41 - 41

9. COMMUNICATIONS ACTION REQUIRED

a. Operation Life Saver Re: Rail Safety Week 42 - 43

THAT Operation Lifesaver's request to promote Canada's 15th annual Rail Safety Week, to be held from April 24 to 30, 2017 and to raise awareness about rail safety, highlighting the ongoing commitment of communities along with rail companies, in making Canada's rail network even safer, be supported.

b. Township of Zorra Re: Automated External Defibrillators Policy for Installation in Ontario Schools 44 - 45

THAT the resolution of the Township of Zorra requesting the Premier, and Minster of Education, develop a policy that enables all schools and school boards in Ontario, that allows individual elementary and secondary schools to have an AED installed in their schools, as soon as possible for the safety of our children, be supported.

c. Association of Municipalities Ontario Re: 2017 Asset Management Symposium 46 - 46

THAT the Members of Council be authorized to attend the 2017 Asset Management Symposium in Toronto, on April 4 and 5, 2017, in accordance with the Town's Travel and Professional Development Policies.

d. Windsor International Airport Re: Canadian Forces Snowbirds 47 - 47

THAT a letter be sent to the Canadian Air Division Headquarters National Defence advising of the Town of Tecumseh's support for the Canadian Forces Snowbirds and other Royal Canadian Air Force aircraft, to flypast the Town of Tecumseh, as low as 500 feet, as part of their air display event at Windsor International Airport on May 27-28, 2017.

10. COMMITTEE MINUTES

a. Senior Advisory Committee 48 - 50
February 23, 2017

b. Corn Festival Committee 51 - 53
February 23, 2017

11. REPORTS

a. Chief Administrative Officer

1. Chief Administrative Officer, Report No. 03/17 54 - 71
Re: Strategic Priorities 2017-2018

2. Acting Chief Administrative Officer, Report No. 04/17 72 - 90
Re: Ward Boundary & Council Structure Review - Supplementary Report

b. Fire & Rescue Services

1. Director of Fire Services & Fire Chief, Report No. 04/17 91 - 93
Re: Ultimate Fun Firefighter Challenge Station 2 – May 13, 2017

c. Public Works & Environmental Services

1. Drainage Superintendent, Report No. 17/17 94 - 101
Re: West Branch Delisle Drain – Tender Award

12. BY-LAWS

a. By-law No. 2017-14 — 102 - 105

Being a by-law to authorize the execution of an Amendment to the Grant Funding Agreement between The Corporation of the Town of Tecumseh and Her Majesty the Queen in Right of Ontario as represented by the Minister of the Environment and Climate Change (Source Protection Municipal Implementation Fund)

b. By-law No. 2017-15 — 106 - 157

Being a by-law to provide for the repair and improvements to the Seventh Concession Drain

c. By-law No. 2017-16 — 158 - 159

Being a By-law to amend By-law No. 2016-82, a bylaw which prescribes tariffs of administrative fees and charges for the Town of Tecumseh for the year 2017

13. UNFINISHED BUSINESS

a. Unfinished Business Listing — 160 - 160

March 14, 2017

14. NEW BUSINESS

15. MOTIONS

a. By-law No. 2017-17 — 161 - 161

Being a by-law to confirm the proceedings of the March 14, 2017 regular meeting of the Council of The Corporation of the Town of Tecumseh

16. NOTICES OF MOTION

17. NEXT MEETING

a. Tuesday, March 28, 2017

6:00 pm Public Council Meeting Re ZBA 11957 Tecumseh Road

7:00 pm Regular Council Meeting

18. ADJOURNMENT

MINUTES OF A SPECIAL MEETING OF
THE COUNCIL OF THE TOWN OF TECUMSEH

Tecumseh Council meets in special session on Tuesday, January 17, 2017, at Torino Pizzeria, located at 12049 Tecumseh Road, in the Town of Tecumseh, Ontario at 8:30 a.m.

(SCM 1-1)
ORDER
Mayor Gary McNamara calls the meeting to order at 8:30 a.m.

(SCM 1-2)
ROLL CALL

Present:	Mayor	- Gary McNamara
	Deputy Mayor	- Joe Bachetti
	Councillor	- Andrew Dowie
	Councillor	- Brian Houston
	Councillor	- Tania Jobin
	Councillor	- Rita Ossington
	Councillor	- Bill Altenhof
Also Present:	Chief Administrative Officer	- Tony Haddad
	Director Staff Services/Clerk	- Laura Moy
	Director Public Works & Environmental Services	- Dan Piescic
	Director Fire Services/ Fire Chief	- Doug Pitre
	Director Parks & Recreation	- Paul Anthony
	Director Planning & Building	- Brian Hillman
	Director Information Technology	- Shaun Fuerth
	Manager Strategic Initiatives	- Lesley Racicot

(SCM 1-3)
PECUNIARY INTEREST
None declared.

(SCM 1-4)
INTRODUCTION AND PURPOSE OF MEETING
The purpose of the meeting is to hold a Strategic Planning and Priority Setting Session to review the strategic priorities established in 2015 and to make any necessary mid-term revisions for 2016-2017.

(SCM 1-5)
DELEGATIONS
Michael Fenn, Senior Advisory, StrategyCorp acts as the Facilitator for the meeting.

He reviews the framework for the mid-term strategy session including the themes and potential actions relating to the priorities.

The Chief Administrative Officer provides an environment scan including a brief summary of the achievements related to the Strategic Priorities for 2015-2016. A summary of key projects currently underway is described with projected timelines.

Roundtable discussions are held reflecting on the accomplishments and progress during the past two years and what Council and Administration have achieved in relation to the Strategic Priorities.

The group deliberates priorities to be undertaken during the remainder of Council's term.

At the conclusion of the discussion, the Facilitator advises the results of the session will be captured in a report to Council at a later date, outlining the priorities and activities to the end of 2018.

(SCM 1-6)
COMMUNICATIONS
None.

(SCM 1-7)
REPORTS
None.

(SCM 1-8)
MOTIONS
None.

(SCM 1-9)
ADJOURNMMENT

Motion: (SCM-01/17) Moved by Deputy Mayor Joe Bachetti
Seconded by Councillor Andrew Dowie

THAT there being no further business to discuss, the January 17, 2017 special meeting of Council now adjourn at 1:00 p.m.

Carried

_____
Gary McNamara, Mayor

_____
Laura Moy, Clerk

MINUTES OF A PUBLIC MEETING OF
THE COUNCIL OF THE TOWN OF TECUMSEH

Tecumseh Council meets in public session on Tuesday, February 28, 2017, in the Council Chambers, 917 Lesperance Road, Tecumseh, Ontario at 6:00 p.m.

(PCM 2-1)
ORDER
The Mayor calls the meeting to order at 6:03 p.m.

(PCM 2-2)
ROLL CALL

Present:	Mayor	- Gary McNamara
	Deputy Mayor	- Joe Bachetti
	Councillor	- Rita Ossington
	Councillor	- Andrew Dowie
	Councillor	- Bill Altenhof
Also Present:	Director Planning & Building Services	- Brian Hillman (6:13 p.m.)
	Director Fire Services & Fire Chief	- Doug Pitre
	Deputy Clerk	- Christina Hebert
	Manager Planning Services	- Chad Jeffery
	Manager Engineering Services	- Phil Bartnik

Councillor Tania Jobin and Councillor Brian Houston are absent for personal business.

(PCM 2-3)
PECUNIARY INTEREST
There is no pecuniary interest declared by a Member of Council.

(PCM 2-4)
INTRODUCTION AND PURPOSE OF MEETING
The purpose of the meeting is to consider proposed housekeeping amendments to the Town's three (3) Zoning By-laws that regulate the use of land across the Town (Tecumseh Zoning By-law 1746, St. Clair Beach Zoning By-law 2065 and Sandwich South Zoning By-law 85-18), pursuant to the provisions of the Planning Act, R.S.O, 1990. The housekeeping amendments propose to introduce regulations pertaining to the use of shipping containers as accessory storage units in accordance with the general concepts contained in the Planning and Building Services Report No. 37/16.

The Manager Planning Services explains the temporary use by-law that permitted a shipping container to be used as a storage unit at the property located on the southwest corner of Riverside Drive and Lesperance Road, is set to expire in November 2017. This temporary use by-law provided the impetus for consideration of the proposed housekeeping amendments to the three zoning by-laws.

When considering a regulatory approach to shipping containers, there are two categories of potential use: shipping containers as building components and shipping containers as accessory storage units. The Manager Planning Services highlights the advantages and disadvantages of both categories of potential use.

He further advises there have been occurrences, in recent years, within the Town and region involving the use of shipping containers for storage purposes. This is being seen primarily in industrial areas where they are being used for the storage of material related to the industrial use located on the property.

The Manager Planning Services cautions the use of shipping containers for storage in areas other than industrial zones. Their use in residential locations has disadvantages, due to the difficulties associated with visually integrating them into these areas.

The proposed draft housekeeping amendments prohibit the permanent placement of shipping containers as storage units in all areas of the Town other than industrial zones. For non-industrial zones, the temporary use of shipping containers for moving purposes, or on construction sites, will be permitted subject to limiting the duration of the temporary placement of a shipping container. For industrial zones, the proposed amendments contain a number of provisions, including: restricting the number of containers per property, establishing the maximum size of a container, and restricting the location on the site.

In response to an inquiry, the Manager Planning Services confirms no complaints have been received respecting the current temporary shipping container located at the corner of Lesperance Road and Riverside Drive, however the location of the container is sheltered from view.

The Manager Planning Services reiterates the amending by-laws would contain provisions for the use of shipping containers, such as the duration of the temporary placement of a shipping container.

(PCM 2-5)
DELEGATIONS
Ron Girard
Mr. Girard advises he operates a landscape business and utilizes two shipping containers to store his equipment. He is interested in building a barn on his property to store equipment, however the County of Essex has denied his request.

The Manager Planning Services informs the Members that consideration would be given to the uniqueness of this situation. A follow up report will be prepared for Council's consideration.

The Public Works & Environmental Services Department will contact the County of Essex to further investigate the matter.

David Beres
Mr. Beres requests consideration be given to including agricultural zones for temporary use of shipping containers. He remarks most shipping container businesses rent on a minimum monthly basis. He further suggests viewing the Container Depot Express website for examples of the various shipping container styles.

(PCM 2-6)
COMMUNICATIONS

A. Notice of Public Meeting, February 3, 2017, Re: ZBA to introduce regulations pertaining to the use of shipping containers
B. Director Planning & Building Services, Report No. 37/16, Re: Potential Alternative Uses for Shipping Containers

Motion: (PCM-03/17) Moved by Councillor Rita Ossington
Seconded by Deputy Mayor Joe Bachetti
THAT the Communications listed as Items A and B on the February 28, 2017, Public Council Meeting Agenda, be received**.**

Carried

(PCM 2-7)
ADJOURNMMENT

Motion: (PCM-04/17) Moved by Councillor Bill Altenhof
Seconded by Councillor Rita Ossington

THAT there being no further business to discuss, the February 28, 2017, Public Meeting of the Council of the Town of Tecumseh adjourn at 6:32 pm.

Carried

_____
Gary McNamara, Mayor

_____
Laura Moy, Clerk

MINUTES OF A MEETING OF
THE COUNCIL OF THE TOWN OF TECUMSEH

Tecumseh Council meets in regular public session on Tuesday, February 28, 2017, in the Council Chambers, 917 Lesperance Road, Tecumseh, Ontario at 7:00 p.m.

(RCM 3-1)
ORDER
The Mayor calls the meeting to order at 7:06 pm.

(RCM 3-2)
MOMENT OF SILENCE
The Members of Council and Administration observe a moment of silence.

(RCM 3-3)
NATIONAL ANTHEM
The Members of Council and Administration observe the National Anthem of O'Canada.

(RCM 3-4)
ROLL CALL

Present:	Mayor	- Gary McNamara
	Deputy Mayor	- Joe Bachetti
	Councillor	- Rita Ossington
	Councillor	- Andrew Dowie
	Councillor	- Bill Altenhof
Also Present:	Chief Administrative Officer	- Tony Haddad
	Director Corporate Services & Clerk	- Laura Moy
	Deputy Clerk	- Christina Hebert
	Director Financial Services & Treasurer	- Luc Gagnon
	Director Fire Services & Fire Chief	- Doug Pitre
	Director Information & Communication Services	- Shaun Fuerth
	Director Planning & Building Services	- Brian Hillman
	Manager Engineering Services	- Phil Bartnik
	Manager Planning Services	- Chad Jeffery
	Manager Water & Wastewater	- Denis Berthiaume
	Manager Recreation Program & Events	- Kerri Rice
	Water Operator	- Brad Dupuis

Councillor Tania Jobin and Councillor Brian Houston are absent for personal business.

PECUNIARY INTEREST
There is no pecuniary interest declared by a Member of Council.

The Mayor welcomes the Royal Canadian Legion Cadets who are attending the meeting as part of their training curriculum. The Cadets toured the Tecumseh Fire Hall Station No.1, as well as the Tecumseh OPP station, prior to the Regular Council Meeting.

(RCM 3-5)
MINUTES

Motion: (RCM-44/17) Moved by Deputy Mayor Joe Bachetti
Seconded by Councillor Andrew Dowie
THAT the minutes of the February 14, 2017, Regular Meeting of Council, both as were duplicated and delivered to the Members, are adopted.

Carried

(RCM 3-6)
SUPPLEMENTARY AGENDA ADOPTION

Motion: (RCM-45/17) Moved by Councillor Rita Ossington
Seconded by Councillor Bill Altenhof
THAT the February 28, 2017, Supplementary Council Agenda, be adopted.

Carried

(RCM 3-7)
DELEGATIONS

Western Secondary School Co-op Program
Western Secondary School's Vice Principal, Matt Sanders, and Cooperative Education Teacher, Dawn Garvey, present an award to the Town of Tecumseh for their outstanding commitment to Western Secondary School's Co-op program and in particular Manager Water & Wastewater, Denis Berthiaume and Water Operator, Brad Dupuis, for the meaningful work experience they have provided to students.

Essex Powerlines & Youth in Community Fund
Essex Power Corporation General Manager, Joe Barile, and President & CEO, Ray Tracey, provide an update on the activities of Essex Power Corporation and explain the electricity bill breakdown, as well as the conservation and demand management program. The Members are informed of preventative maintenance, in addition to efficiencies through the use of technology developed in-house, in partnership with the Ministry of Energy. The technology is making Essex Power Corporation a 21st Century utility.

Messrs. Tracey and Barile present the Town with the Youth in Community Fund donation for Tecumseh youth initiatives.

2017 Proposed BIA Budget
The BIA Board Chair, Candice Dennis, Vice Chair, Tony Nehme, and Coordinator, Paula Rorai, present to Council the 2017 Proposed BIA Budget.

The BIA Chair provides an overview of the BIA's 2016 accomplishments, such as the Annual Fall Into Health Day, Annual Christmas Party, Christmas in Tecumseh Santa Parade, Tecumseh Night Market Events and Tecumseh Corn Festival Parade.

The BIA Chair notes a decrease in property owners and businesses in 2016 compared to 2015, as a result of the BIA boundary change.

Motion: (RCM-46/17) Moved by Deputy Mayor Joe Bachetti
Seconded by Councillor Bill Altenhof
THAT the 2017 Tecumseh BIA Budget be approved.

Carried

In response to an inquiry, the BIA Board Chair advises that a levy increase is not being considered at this time as the BIA Board is sensitive to its Members' needs, service level and the recent changes in the BIA Boundary.

Windsor Express
President & CEO, Dartis Willis, of the Windsor Express thanks the Town for supporting the Windsor Express Team. There is a great following from the Town of Tecumseh and with that in mind; an invitation is extended to participate in a "Tecumseh Night". The Mayor is asked to conduct the coin toss and wear a special Tecumseh Jersey. The Circle of Seven has supported the Windsor Express Team and will be sponsoring the Tecumseh Jersey.

Mr. Dave Momotiuk explains the Windsor Express desire to market to Tecumseh residents and have designated a game taking place on Wednesday, March 22 as "Tecumseh Night."

There will be pre-game activities, a ball toss and a VIP reception with benefits going towards the Tecumseh Area Historical Society. A Tecumseh resident will be singing the National Anthem. Mr. Willis explains VIP seats will be designated for Tecumseh residents. The BIA will also be invited to have their businesses represented.

The Town is requested to help promote the event and encourage participation. Additionally, on March 11 & 18 Windsor Express players will be at the Tecumseh Area Historical Society to sign autographs and auction jerseys. All proceeds will be donated to the Tecumseh Area Historical Society.

(RCM 3-8)
COMMUNICATIONS

Communications for Information

A. Windsor-Essex County Health Unit Re: Opioid Addiction and Overdose

Motion: (RCM-47/17) Moved by Councillor Bill Altenhof
Seconded by Councillor Rita Ossington
THAT Communications – *for Information* A as listed on the February 28, 2017, Regular Council Meeting Agenda are received.
Carried

Communications - Action Required

A. Windsor-Essex County Health Unit, Re: Smoke-Free Ontario Amendment Act, 2016 - Marijuana Controls under Bill 178
B. Ontario Invasive Plant Council & Essex Region Conservation Authority, Re: Invasive Plant Management Workshop
C. City of Hamilton, Re: Request for Legislation to Establish Updated Guidelines for Ward Boundary Reviews and to Create an Independent Body to Conduct those Reviews

Motion: (RCM-48/17) Moved by Councillor Rita Ossington
Seconded by Councillor Bill Altenhof
THAT the Tecumseh Council support the position of the Windsor-Essex County Board of Health and Simcoe Muskoka District Health Unit recommending the enactment of the *Smoke-free Ontario Amendment Act* which received Royal Assent on June 9, 2016, as well as their suggestion to include medicinal and recreational marijuana as a prescribed substance within the regulations;
AND THAT the Mayor and Members of Council be authorized to attend the Creating an Invasive Plant Management Strategy in Essex, Thursday, March 9, 2017, in accordance with the Town's Travel and Professional Development Policies;

Motion: (RCM- 49/17) Moved by Councillor Andrew Dowie
Seconded by Councillor Bill Altenhof

THAT the resolution of Hamilton City Council requesting the Province to develop legislation to establish updated guidelines for ward boundary reviews and to create an independent body to conduct the reviews, taking into consideration the principle of effective representation and having sensitivity to the relevant interest of Ontario's rural and urban communities, be supported.

Carried

(RCM 3-9)
COMMITTEE MINUTES

Motion: (RCM-50/17) Moved by Councillor Rita Ossington
Seconded by Councillor Andrew Dowie

THAT the February 13, 2017 Minutes of the Youth Advisory Committee, as was duplicated and delivered to the Members of Council, are accepted.

Carried

Motion: (RCM-51/17) Moved by Deputy Mayor Joe Bachetti
Seconded by Councillor Bill Altenhof

THAT the February 13, 2017 Minutes of the Heritage Committee, as was duplicated and delivered to the Members of Council, are accepted.

Carried

Motion: (RCM-52/17) Moved by Councillor Rita Ossington
Seconded by Councillor Bill Altenhof

THAT the February 13, 2017 Minutes of the Cultural & Arts Advisory Committee, as was duplicated and delivered to the Members of Council, are accepted.

Carried

(RCM 3-10)
REPORTS

Director Corporate Services & Clerk, Report No. 04/17 Re: Committee Appointments, Filling of 2017 Vacancies

Motion: (RCM-53/17) Moved by Deputy Mayor Joe Bachetti
Seconded by Councillor Bill Altenhof

THAT Corporate Services & Clerk Report No. 4/17 regarding Corn Festival Committee Appointments and the filling of the 2017 Vacancies, be received;
AND THAT John Parent and Phil Kane are appointed to the vacant positions on the Corn Festival Committee.
As recommended by the Director Corporate Services & Clerk under Report No. 04/17.

Carried

Director Fire Services & Fire Chief, Report No. 03/17, Re: Tecumseh Fire Services Lock Box Program Fee

Motion: (RCM-54/17) Moved by Councillor Bill Altenhof
Seconded by Councillor Rita Ossington

THAT the Tecumseh Fire Services Lock Box Program fee described in the Deputy Fire Chief's July 24, 2001 report be increased to $225.00 (taxes included), per Lock Box;

AND THAT Administrative Fees and Charges By-law No. 2016-82 Schedule B be amended to add a Lock Box Fee of $199.12, plus HST.

As recommended by the Director Fire Services & Fire Chief under Report No. 03/17.

Carried

In response to an inquiry, the Fire Chief explains that swipe cards for access purposes could be placed in the lock box.

Manager Recreation Programs & Events, Report No. 01/17, Re: Essex Power Youth In Community Fund

Motion: (RCM-55/17) Moved by Councillor Rita Ossington
Seconded by Councillor Bill Altenhof

THAT Parks and Recreation Report No. 01/17, dated February 2, 2017, regarding the Essex Power Youth in Community Fund, be received for information.

As recommended by the Manager Recreation Programs & Events, under Report No. 01/17.

Carried

Manager Planning Services, Report No. 05/17, Re: Site Plan Control, 1808250 Ontario Limited - C/O Rosati Construction, 5515 Roscon Industrial Drive

Motion: (RCM-56/17) Moved by Councillor Bill Altenhof
Seconded by Councillor Rita Ossington

THAT "Overall Site Plan Layout A1.0", as prepared by Rosati Construction, attached to Planning and Building Services Report No. 05/17 as Attachment 2, which depicts a 1,060 square metre (11,415 square foot) industrial addition, along with associated on-site works on a 0.97 hectare (2.4 acre) property located on the west side of the Roscon Industrial Drive (5515 Roscon Industrial Drive), be approved, subject to:

i) the Owner depositing with the Town security in the form of cash or letter of credit in the amount of ten thousand dollars ($10,000) to ensure that all of the services and other obligations of the Owner are completed to the satisfaction of the Town, which cash or letter of credit security deposit shall be returned to the Owner on completion and final inspection of all obligations of the Owner as shown on the aforementioned plans; and

ii) a Site Services Plan and the associated Stormwater Management Report being approved by the Town.

all of which is in accordance with Section 41 of the *Planning Act, R.S.O. 1990.*

As recommended by the Manager Planning Services, under Report No. 05/17.

Carried

Manager Planning Services, Report No. 06/17, Re: Site Plan Control, Beach Grove Golf Club, 14134 Riverside Drive

Motion: (RCM-57/17) Moved by Councillor Bill Altenhof
Seconded by Deputy Mayor Joe Bachetti

THAT a by-law authorizing the execution of the Beach Grove Golf and Country Club Limited site plan control amending agreement, satisfactory in form to the Town's Solicitor, which allows for the construction of a new 226 square metre (2,431 square foot) pool house on a 2.7 hectare (6.8 acre) property located on the north side of Riverside Drive, immediately north of its intersection with Kensington Boulevard (14134 Riverside Drive), along with associated on-site services/works, be adopted, subject to the following occurring prior to the Town's execution of the Agreement:

i) the Owner executing the site plan control amending agreement;
ii) the Owner posting security for performance pursuant to paragraph 4.1 of the amending agreement; and
iii) the Owner providing the construction lien deposit pursuant to paragraph 4.2 of the amending agreement.

AND THAT the Mayor and Clerk be authorized to execute the site plan amending agreement, as attached hereto and/or in such modified version as may be approved by the Town's solicitor prior to execution and such further documents as are called for by the site plan amending agreement approved above including, but not limited to, the execution of the acknowledgement/direction required to register the site plan amending agreement on title to the lands and such other acknowledgement/directions for any related transfers or real property registrations contemplated by the site plan amending agreement.

As recommended by the Manager Planning Services, under Report No. 06/17.

Carried

Manager Roads & Fleet, Report No. 03/17, Re: 2017 Supply of Various Vehicles

Motion: (RCM-58/17) Moved by Councillor Rita Ossington
Seconded by Deputy Mayor Joe Bachetti

THAT Administration obtain quotations for the 2017 Supply of Various Vehicles as follows:

	DEPARTMENT	VEHICLE	ESTIMATED PRICE
Appendix A	Public Works	PW 01-09 Tandem Axle Snowplow	$ 290,000
		Hoe Pack Attachment	$ 10,000
	Parks	P 04-10 2500 Pickup Truck	$ 37,000
		P 09-17 Bobcat S-650	$ 50,000
		P 20-11 Landscape Trailer	$ 6,000
		Kubota Mowers (4)	$ 56,000
	Water	W 08-08 1500 Pickup Truck	$ 32,000
		Sub total Appendix A	**$ 481,000**
Appendix B	Fire	Spartan Engine	$ 600,000
		Sub total Appendix B	**$ 600,000**
		Total Appendix A + B	**$ 1,081,000**

AND THAT the following equipment be declared surplus and disposed of through Part VI, Disposal of Surplus or Scrap Materials and Equipment of the Town's Purchasing By-law:

DEPARTMENT	VEHICLE	UNIT NUMBER	YEAR PURCHASED
Public Works	PW 01-09 Tandem Axle Snowplow	PW 01-09	2009
	PW Bobcat S-650		2011
Parks	P 04-10 2500 Pickup Truck	P 04-10	2009
	Landscape Trailer	P 20-11	2011
	Kubota Mowers (4)		2014
Fire	Spartan Engine	Rescue 1	1990

AND THAT Appendix A Town of Tecumseh 2017 – 2026 Ten Year Fleet Funding and Replacement Schedules and Appendix B Town of Tecumseh 2017 – 2026 Ten Year Fire and Rescue Services Apparatus Funding and Replacement Schedules attached to Public Works & Environmental Services Report No. 03/17 be adopted as amended and attached;

AND FURTHER THAT Funding for the purchase of the 2017 Supply of Various Vehicles be funded as follows:

(a) Appendix A vehicles: $481,000 plus associated costs for outfitting $14,000 for a total of $495,000 be funded from the Fleet Lifecycle Reserve, and

(b) Appendix B vehicle: $600,000 plus associated costs for outfitting $6,000 for a total of $606,000 be funded from the Fire Apparatus Lifecycle Reserve.

As recommended by the Manager Roads & Fleet, under Report No. 03/17.

Carried

Manager Water & Wastewater, Report No. 10/17, Re: Drinking Water Quality Management System Operational Plan Version 7

Motion: (RCM-59/17) Moved by Councillor Bill Altenhof
Seconded by Councillor Andrew Dowie

THAT the Drinking Water Quality Management System Operational Plan Version 7 be endorsed and committed to.

As recommended by the Manager Water & Wastewater, under Report No. 10/17.

Carried

Drainage Superintendent, Report No. 11/17, Re: West Branch Delisle Drain - Tribunal Decision

Motion: (RCM-60/17) Moved by Deputy Mayor Joe Bachetti
Seconded by Councillor Bill Altenhof

THAT the Drainage Report and specifications for the West Branch Delisle Drain as prepared by Mr. Gerald Rood, P.Eng., of Rood Engineering Inc., dated April 28, 2016, as amended to reflect the Tribunal decision to revise the original Schedule of Assessment subsequent to an appeal by Charles McLean and Carol McKeegan, under section 54(1) of the Drainage Act (amended Drainage Report) be received;

AND THAT third and final reading be given to By-law No. 2016-49 to adopt the amended Drainage Report.

As recommended by the Drainage Superintendent, under Report No. 11/17.

Carried

Manager, Engineering Services, Report No. 12/17, Re: 8th Concession Road Trunk Sanitary & Watermain, Phase 1 Tender Award

Motion: (RCM-61/17) Moved by Councillor Bill Altenhof
Seconded by Councillor Rita Ossington

THAT the tender for the 8th Concession Road Trunk Sanitary & Watermain, Phase 1 project in the amount of $3,418,000 excluding HST be awarded to Coco Paving Inc.

AND THAT the Mayor and Clerk be authorized to execute an agreement, satisfactory in form to the Town's Solicitor, with Coco Paving Inc.;

AND THAT Project funding allocations, reflecting a $657,953 decrease, be adjusted as follows:

- Road Lifecycle Reserve–increase from $1,382,440 to $1,413,413
- Watermain Reserve Fund–decrease from $1,093,315 to $1,002,982
- Wastewater Sewers Reserve Fund–decrease from $2,246,650 to $1,549,615
  *Expected landowner recoveries for the Wastewater Sewers Reserve Fund to be calculated.
- Bridge Lifecycle Reserve – increase from $0 to $98,442

As recommended by the Manager, Engineering Services, under Report No. 12/17.

Carried

Manager Water & Wastewater, Report No. 13/17, Re: Ministry of the Environment and Climate Change, Inspection Report, Tecumseh Distribution System

Motion: (RCM-62/17) Moved by Councillor Bill Altenhof
Seconded by Councillor Andrew Dowie

THAT the Ministry of the Environment and Climate Change Inspection Report Number 1-CN66W for the Tecumseh Distribution System dated February 14, 2017, be received.

As recommended by the Manager Water & Wastewater, under Report No. 13/17.

Carried

Manager Engineering Services, Report No. 14/17, Re: Pulleyblank Street, Crowder Court, and Moro Drive Sanitary Sewer Extension – Tender Award

Motion: (RCM-63/17) Moved by Deputy Mayor Joe Bachetti
Seconded by Councillor Rita Ossington

THAT the tender for the Pulleyblank Street, Crowder Court, and Moro Drive Sanitary Sewer Extension in the amount of $2,748,769, excluding HST, be awarded to D'Amore Construction (2000) Ltd.;
AND THAT the Mayor and Clerk be authorized to execute an agreement, satisfactory in form to the Town's Solicitor with D'Amore Construction (2000) Ltd.;
AND THAT Project funding allocations, reflecting a $510,329 decrease, be adjusted as follows:

- Road Lifecycle Reserve – decrease from $1,568,600 to $1,433,329
- Watermain Reserve Fund – decrease from $526,000 to $465,329
- Wastewater Sewers Reserve Fund – decrease from $930,000 to $664,867
  *Expected landowner recoveries for the Wastewater Sewers Reserve Fund are $600,000
- Storm Sewer Lifecycle – decrease from $791,000 to $741,746

As recommended by the Manager Engineering Services, under Report No. 14/17.

Carried

(RCM 3-11)
BY-LAWS

Motion: (RCM-64/17) Moved by Councillor Bill Altenhof
Seconded by Councillor Rita Ossington

THAT By-law No. 2017-07 being a by-law to authorize the execution of Final Transfer Payment Agreement with Her Majesty the Queen in right of Ontario as represented by the Minister of Transportation for the Province of Ontario and The Corporation of the Town of Tecumseh under the Ontario Municipal Cycling Infrastructure Program;
AND THAT By-law No. 2017-08 being a by-law to amend By-Law No. 2016-47 being a bylaw to close up and authorize the sale of a portion of alley located on the north side of the properties located at 12410 to 12480 Little River Boulevard;
AND THAT By-law No. 2017-09 being a by-law to amend By-Law No. 2015-92 being a by-law to close up and authorize the sale of a portion of alley located on the west side of 12522 Ballard Street;
AND THAT By-law No. 2017-10 being a by-law to authorize the execution the execution of a Funding Agreement with Her Majesty the Queen in right of Ontario as represented by the Minister of Agriculture, Food and Rural Affairs for the Province of Ontario and The Corporation of the Town of Tecumseh;
AND THAT By-law No. 2017-11 being a by-law to appoint members to the Corn Festival Committee for the term ending 2017;
AND THAT By-law No. 2017-12 being a by-law to authorize the execution of Transfer Payment Agreement with Her Majesty the Queen in right of Ontario as represented by the Minister of Tourism, Culture and Sport under the Ontario 150 Partnership Program.
Be given first and second readings.

Carried

Motion: (RCM-65/17) Moved by Councillor Rita Ossington
Seconded by Councillor Andrew Dowie

THAT By-law No. 2016-49 being a by-law to provide for the repair and improvements to the West Branch Delisle Drain;
AND THAT By-law No. 2017-07 being a by-law to authorize the execution of Final Transfer Payment Agreement with Her Majesty the Queen in right of Ontario as represented by the Minister of Transportation for the Province of Ontario and The Corporation of the Town of Tecumseh under the Ontario Municipal Cycling Infrastructure Program;
AND THAT By-law No. 2017-08 being a by-law to amend By-Law No. 2016-47 being a bylaw to close up and authorize the sale of a portion of alley located on the north side of the properties located at 12410 to 12480 Little River Boulevard;
AND THAT By-law No. 2017-09 being a by-law to amend By-Law No. 2015-92 being a by-law to close up and authorize the sale of a portion of alley located on the west side of 12522 Ballard Street;
AND THAT By-law No. 2017-10 being a by-law to authorize the execution the execution of a Funding Agreement with Her Majesty the Queen in right of Ontario as represented by the Minister of Agriculture, Food and Rural Affairs for the Province of Ontario and The Corporation of the Town of Tecumseh;
AND THAT By-law No. 2017-11 being a by-law to appoint members to the Corn Festival Committee for the term ending 2017;
AND THAT By-law No. 2017-12 being a by-law to authorize the execution of Transfer Payment Agreement with Her Majesty the Queen in right of Ontario as represented by the Minister of Tourism, Culture and Sport under the Ontario 150 Partnership Program.
Be given third and final reading.

Carried

(RCM 3-12)
UNFINISHED BUSINESS
The Members receive the Unfinished Business listing.

(RCM 3-13)
NEW BUSINESS

Tecumseh Road
In response to an inquiry respecting road work on the south side of Tecumseh Road, between Manning Road and Arlington Boulevard, the Members are apprised fiber utilities are being installed and drainage improvements are being undertaken.

St. Clair Green Giants Baseball Team
In light of St. Clair College's recent announcement regarding the St. Clair Green Giants baseball team, which will be based out of Lacasse Park, inquiries are made respecting arrangements to address errant baseballs. The Chief Administrative Officer advises discussions will occur with St. Clair College. He notes improvements have been made to the ball field by the Tecumseh Baseball Club to the backstop, raising the fencing in right and left fields and added mesh.

School Vandalism
Deputy Mayor, Joe Bachetti, explains there has been a rash of vandalism in the elementary schools. As of late, A.V. Graham's windows were broken twice and St. Pius X has had ten (10) windows broken. The media is asked to help create awareness and the OPP has been asked to heighten patrols in the school areas.

(RCM 3-14)
MOTIONS

Motion: (RCM-66/17) Moved by Councillor Rita Ossington
Seconded by Councillor Bill Altenhof

THAT the In Camera meeting reconvene in Closed Session at 8:51 p.m. in accordance with Section 239 (2)(b)(c)(d) and (f) of the Municipal Act, 2001, which permits a meeting to be closed to the public to consider: personal matters about an identifiable individual, including municipal or local board employees; a proposed or pending acquisition or disposition of land by the municipality or local board; labour relations or employee negotiations; and advice that is subject to solicitor-client privilege, including communications necessary for that purpose.

Carried

Motion: (RCM-67/17) Moved by Deputy Mayor Joe Bachetti
Seconded by Councillor Bill Altenhof

THAT the Regular Meeting of Council reconvenes in public session at 9:03 p.m.

Carried

Motion: (RCM-68/17) Moved by Councillor Rita Ossington
Seconded by Councillor Bill Altenhof

THAT the direction given at the February 28, 2017, In Camera meetings held at 5:00 pm and 8:51 pm in accordance with Section 239(b)(c)(d) and (f) of the *Municipal Act, 2001,* regarding bargaining with CUPE Locals 702.1, 702.2 and 702.5 and with respect to the terms of the Employment Agreement with the Chief Administrative Officer, be confirmed and that a letter be sent to Mrs. Robson in response to her request to appear as a Delegation before Council regarding the Del Duca OPA / ZBA appeals on the grounds that the matter is the subject of an appeal proceeding to the OMB on Council's prior decision; and that the letter advise her of the date, time, and location of the OMB Pre-Hearing on the matter and thank her for her ongoing interest in this matter.

Carried

Motion: (RCM-69/17) Moved by Councillor Bill Altenhof
Seconded by Councillor Andrew Dowie

THAT By-law 2017-13 being a by-law to confirm the proceedings of the February 28, 2017 regular meeting of the Council of The Corporation of the Town of Tecumseh.
Be given first, second, third and final reading.

Carried

(RCM 3-15)
NOTICES OF MOTIONS
There are no Notices of Motion.

(RCM 3-16)
NEXT MEETING
A Public Meeting of Council will be held at 6:00 pm on Tuesday, March 14, 2017 regarding Repair & Improvement to 7th Concession Drain.

The next Regular Council meeting will be held on Tuesday, March 14, 2017 at 7:00 pm.

(RCM 3-17)
ADJOURNMENT

Motion: (RCM-70/17) Moved by Deputy Mayor Joe Bachetti
Seconded by Councillor Rita Ossington
THAT there being no further business the February 28, 2017 regular meeting of Council now adjourn at 9:05 pm.

Carried

_____
Gary McNamara, Mayor

_____
Laura Moy, Clerk

2017 BUDGET

Essex Region Conservation Authority

sustaining the place for life

The Essex Region Conservation Authority is one of 36 Conservation Authorities across Ontario. The role of Conservation Authorities and their relationship to various partners, including member municipalities and the provincial government derives primarily from their enabling legislation, the *Conservation Authorities Act* of Ontario.

This *Act* provides a broad mandate which allows Conservation Authorities to set priorities in collaboration with member municipalities. Our programs demonstrate an ongoing and consistent response to real and serious problems and challenges in the region - land degradation, natural area coverage, and flooding and erosion – the same challenges we faced upon establishment. Today, new issues such as water quality and the Great Lakes, climate adaptation, and sustainable communities must be considered in meeting the needs of municipalities.

Building from our successes, ERCA's focus continues to be in finding new ways to leverage resources which more effectively address provincial and watershed priorities. Given our daily reliance on our natural resources, the projects, programs and priorities implemented by ERCA are critically important to ensuring the Windsor/Essex/Pelee Island region will continue to be **the Place for Life**.

The **Essex Region Conservation Authority** was established in 1973 to protect, restore and manage the natural resources of the Windsor-Essex region. In keeping with the *Conservation Authorities Act*, ERCA works in partnership with residents, municipalities, the Province of Ontario, Government of Canada, and other agencies to increase natural area coverage through tree planting and habitat restoration, improve water quality across our watersheds and our Great Lakes, protect people and property from flooding and erosion, and further our understanding of the environment through science and education. Our goal is a sustainable future which improves our local environment, helps create a community we can all be proud of, and a more vibrant economy that makes this region **The Place for Life**.

2017 WATERSHED PRIORITIES

ERCA has consistently demonstrated a strong business case to member municipalities, and is unique from other organizations and agencies in our ability to leverage funds and partnerships to complete projects in our region. The following are some project highlights for 2017.

Climate Change

- Provide input and comments on Lakeshore, Kingsville, Tecumseh, and Leamington Official Plans; three Official Plan Amendments in the City of Windsor; and provide advice and guidance to municipalities on over 700 Planning Act applications.
- Implement 'one window services' to facilitate review of over 900 permit applications including stormwater management submissions of greenhouse developments, major subdivision developments, 150 Municipal Drainage Act submissions, responses to legal requests, 1,200 general inquiries from landowners.
- Apply for and undertake over $1.2 million in Water and Erosion Control Infrastructure (WECI) projects in Windsor and Lakeshore (subject to WECI approvals), providing $600,0000 in funding for those municipalities.
- Manage $3.2 million improvement project on the Lennon Drain for the City of Windsor
- Update the Essex Region Flood Contingency Plan with additional new information technologies and sources of additional real time weather and climate information.
- Initiate the development of a Climate Adaptation Strategy with municipalities to address the impacts of climate change through adaptation and mitigation; and identify actions to address impacts on terrestrial and aquatic ecosystems, water quantity and quality, infrastructure, energy, human communities, and agriculture.

Great Lakes

- Implement research and projects supporting the reduction of phosphorus (P) to Lake Erie including the analysis of water control structures for tile drainage management, rain gardens for urban storm water management, the research of innovative farming practices and Best Management Practices at our demonstration farm that may result in lower phosphorus outputs.
- Continue working with provincial partners on intensive BMP implementation and research program in the Wigle Creek watershed through the Great Lakes Agricultural Stewardship Initiative (GLASI); continued monitoring of streams in the Kingsville/Leamington area to better understand the influence of greenhouses on water quality; intensive monitoring of streams and recreational beaches to track the intensity of harmful algal blooms and to work towards a more rapid method of detection of the toxin they produce.
- Continue monitoring 24 surface water quality stations and 10 ground water quality stations and near shore Great Lakes water quality stations as part of the Provincial Water Quality networks.

Landscapes and Habitats

- Complete wetlands assessment and mapping for MNRF for 500 hectares of Provincially Significant Wetlands.
- Restore at least 100 acres of forest, plant at least 100,000 trees, 20 acres of prairie and collect 2,000 pounds of seed.
- Create a minimum of 4 new wetlands that will help restore hydrology, improve water quality and habitat for wildlife and fish.
- Partner with Caldwell First Nation to undertake the restoration of a coastal wetland at the mouth of Sturgeon Creek. Work with partners to fund the creation of a 70 acre managed wetland at Cedar Creek and a new 10-acre experimental wetland at Hillman Marsh.
- Work with partners to initiate large scale restoration opportunities on the Detroit River to enhance fish habitat, provide greater access to the river for residents to work toward de-listing the Detroit River as an AOC.

Sustainable Communities

- Draft and initiate consultations on Place for Life Policies to ensure ERCA's planning and regulations policies reflect changes in legislation, respond to the changing conditions and municipal demands in our region, and are consistent with ERCA's 2016-2025 Strategic Plan: Sustaining the Place for Life.
- Complete Technical Appendices including Environmental Impact Assessment Guidelines, Stormwater Management Guidelines and Municipal Memorandums of Understanding to facilitate the review and technical clearance of municipal and County planning applications as per the Planning Act.
- Continue to invest in Conservation Areas, including replacement of Maidstone Woods Conservation Area boardwalks; resurfacing Chrysler Canada Greenway with provincial partners; and installation of new roof on the Sawmill Building at the John R. Park Homestead.
- Open the Cypher Systems Group Greenway in partnership with the Essex Region Conservation Foundation, the Town of Essex, and senior levels of government to connect Essex and Amherstburg.
- Work with the Town of Tecumseh, Essex Region Conservation Foundation and other partners to secure funds and build 'Oldcastle Hub' to connect ERCA Greenways to Herb Gray Parkway Trails and trails in the towns of Tecumseh, LaSalle, and the Trans Canada Trail.
- Provide curriculum-based outdoor education for more than 10,000 elementary and secondary school students; and deliver Special High Skills Major Certifications to allow students to graduate with specialized environmental skills.
- Build on the success of the Regional Roundtable, which includes the CEOs from 12 regional agencies to promote the cross-organizational efficiencies that can be realized through working together.

Resilient ERCA

- Create www.essexregionconservation.ca with the Essex Region Conservation Foundation to improve customer service, usability and accessibility compliance; and better integrate messaging with the Essex Region Conservation Foundation to demonstrate the strength of these partnership organizations to the region.
- Explore and begin implementing Open Data services and support for projects in the region.
- Host events that connect people to conservation and raise funds to further enhance the Windsor-Essex-Pelee Island region as the Place for Life.
- Review and update TCA inventory and Capital Plan to guide facility and infrastructure replacement needs and confirm capital plan priorities.
- Implement Filehold Records Management System in Corporate Services and Watershed Management Services departments.
- Finalize records classification system and records policy/retention schedule to support MFIPPA and internal obligations.
- Create and maintain a corporate policy database for shared access that encompasses all departmental active policies to ensure consistency with legislation, public-sector best practice and improved corporate culture.
- Review and update internal corporate and employee Policies and Procedures (Employee Handbook) on a priority basis, including purchasing policies.
- Create and manage internal databases to improve efficiency, enhance customer service, support education program booking, and maintain institutional memory,

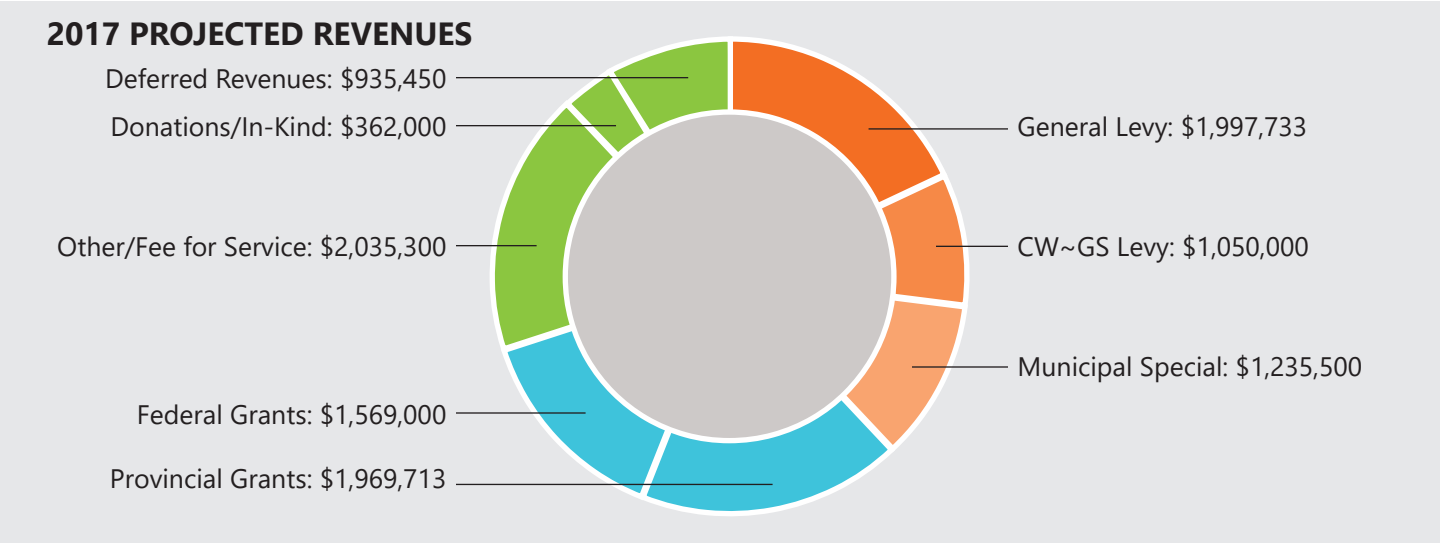

FUNDING SUSTAINABILITY

ERCA's 2017 budget totals $11,154,696. This includes a levy contribution from member municipalities of $3,047,733. **This represents a proposed levy increase of $90,900 overall or $0.34/household** based on CVA.

ERCA is unlike any other Agency, Board or Commission in that it generates significant positive investment. Between 2007 and 2017, ERCA received $26.5 million in total levy, and generated $35 million in new outside funding in support of regional environmental programs and projects related to drinking water source protection, water and erosion control infrastructure, land securement and restoration, education, phosphorous and shoreline enhancement projects. This is in addition to the significant value of the programs and services ERCA provides to municipalities.

The 2017 Budget includes over $4.2 million in leveraged funding, which represents 40% of the total ERCA budget. Combined with fee for service revenues, 72% of ERCA's budget is funded through non-levy sources of funding. In total, less than 25% of ERCA's operational budget is funded through levy.

ERCA is consistently in the bottom five of Ontario's 36 Conservation Authorities in terms of % levy funding operations (~25%); yet in the top 10 in terms of programs and program-related revenues for our region, well below the provincial average (~40%).

ERCA provides a streamlined and centralized source of knowledge, excellent return on investment, and tremendous value in ensuring that this region will remain **the Place for Life**.

	CVA		GENERAL LEVY		CW~GS LEVY		TOTAL LEVY		
MUNICIPALITY	2017	2016	2017	2016	2017	2016	2017	2016	CHANGE
Amherstburg	6.0506%	6.0621%	$ 120,874	$ 106,433	$ 63,531	$ 63,230	$ 184,405	$ 179,243	$ 5,157
Essex	4.92710%	4.9420%	$ 98,429	$ 94,232	$ 51,734	$ 51,891	$ 150,164	$ 146,123	$ 4,037
Kingsville	6.1926%	6.1300%	$ 123,711	$ 116,885	$ 65,022	$ 64,365	$ 188,733	$ 181,250	$ 7,478
Lakeshore	9.0226%	8.9580%	$ 180,247	$ 170,807	$ 94,737	$ 94,059	$ 274,984	$ 264,866	$ 10,111
LaSalle	7.9645%	7.8447%	$ 159,110	$ 149,579	$ 83,627	$ 82,369	$ 242,737	$ 231,949	$ 10,783
Leamington	6.1023%	6.1198%	$ 121,909	$ 116,690	$ 64,075	$ 64,258	$ 185,983	$ 180,948	$ 5,030
Pelee Island	0.3055%	0.3070%	$ 6,102	$ 5,854	$ 3,207	$ 3,223	$ 9,310	$ 9,077	$ 232
Tecumseh	8.2366%	8.2562%	$ 164,545	$ 157,425	$ 86,484	$ 86,690	$ 251,029	$ 244,115	$ 6,908
Windsor	51.1983%	51.3801%	$ 1,022,806	$ 979,695	$ 537,583	$ 539,491	$ 1,560,389	$ 1,519,186	$ 41,164
TOTALS	100%	100%	$ 1,997,733	$ 1,906,833	$ 1,050,000	$ 1,050,000	$3,047,733	$2,956,833	$ 90,900

Essex Region Conservation Authority
sustaining the place for life

360 Fairview Avenue West
Suite 311, Essex, ON, Canada, N8M 1Y6
P 519-776-5209 | F 519-776-8688
www.essexregionconservation.ca

Conservation ONTARIO
Natural Champions

THE CORPORATION OF THE UNITED TOWNSHIPS OF
HEAD, CLARA & MARIA
15 Township Hall Road
STONECLIFFE, ONTARIO, K0J 2K0

Phone: (613) 586-2526 | Fax: (613) 586-2596 | E-mail: hcminfocfischer@gmail.com; or hcmclerkmreith@gmail.com

Tuesday, February 21, 2017

The Honourable Kathleen Wynne, Premier
kwynne.mpp@liberal.ola.org
Legislative Building – Room 281
Queen's Park
Toronto ON M7A 1A1

Re: Building Code Changes – B-08-09-03

Dear Premier Wynne

At its meeting of Friday, February 17, 2017 the Council of the United Townships of Head, Clara & Maria discussed and passed the following resolution questioning the need for regulations being imposed on small rural Ontario, this time concerning the need to have septic systems pumped every 5 years. This legislation is extremely arbitrary and fails to take many, many variables into consideration, least of all the financial burden on rural Ontario seniors. This Council supports the position taken by Reeve Kerr of Tay Valley Township enclosed for your information.

Council respectfully requests your consideration of its position and requests continued consultation with rural Canada when making decisions which ultimately affect each and every one of us.

Sincerely and on behalf of Council

M Reith

Melinda Reith
Municipal Clerk and CAO

Enclosures: Letter from Mayor Jim Gibson, The United Townships of Head, Clara & Maria

HCM Mission: At your service; working effectively to bring together people, partnerships and potential for a strong, connected community.
HCM Vision: Providing a healthy, connected, and sustainable community teeming with possibilities for our citizens now and into the future.

Cc: The Hon. Bill Mauro, Minister of Municipal Affairs – bmauro.mpp.co@liberal.ola.org
The Hon. Chris Ballard, Minister of Housing – cballard.mpp.co@liberal.ola.org
Patrick Brown, Leader of the Progressive Conservative Party – patrick.brown@pc.ola.org
Andrea Horwath, Leader of the New Democratic Party – ahorwath-qp@ndp.on.ca
John Yakabuski, MPP Renfrew-Nipissing-Pembroke - john.yakabuski@pc.ola.org
All Ministers of Provincial Parliament
The Association of Municipalities of Ontario - policy@amo.on.ca
The Rural Ontario Municipal Association
The Federation Of Northern Ontario Municipalities - fonom.info@gmail.com
All Ontario Mayors

From the Office of the Mayor

THE CORPORATION OF THE UNITED TOWNSHIPS OF

HEAD, CLARA & MARIA

15 Township Hall Road

STONECLIFFE, ONTARIO, K0J 2K0

Phone: (613) 586-2526 | Fax: (613) 586-2596 | E-mail: hcminfocfischer@gmail.com, Mayor Gibson: hcmjimg@gmail.com

Friday, February 17, 2017

Dear Minister Mauro,

I am writing to express our Municipality's very serious concerns about the proposed change, B-08-09-03, to the Ontario building code and to ask that you have this change rescinded.

Most of rural Ontario and much of small town, urban Ontario use septic systems. The variables affecting the need to pump out a septic tank are quite numerous. Those who operate their systems carefully can go for many more years than five without pumping the septic tank because the variables are in their favour. This proposed change in these cases is fixing something that is not broken. Creating regulation to force people to pay for a redundant, unnecessary service is incomprehensible.

The proponent of this change has completely missed the appreciation of how much administrative burden this is placing on rural Ontario. Many rural Municipalities have no bylaws regarding the maintenance of septic systems because there is no need to do so as there is virtually no indication of harm being caused. To clearly illustrate just one part of the administrative burden, we have included a "story" called a day in the life of a building inspector that indicates just some of the magnitude of the difficulty of trying to enforce this redundant change.

In our Municipality of 238 full time residents, the 10th smallest in the Province, we average one to two "new builds" annually. The building permit fees for these "new builds" pay for a significant portion of our contract building inspector's time. How does the Province expect us to pay for the disproportionately excessive administrative burden this proposed change would create?

Many Municipalities have septic tank pump out bylaws that address potential problem areas with malfunctioning septic systems and the need for these bylaws have been driven by local circumstance to address local potential problems and not by any universally applied directive from the Province. In many cases, the drivers of these regulations are cottager associations, conservation authorities, and Municipalities who are acting to preserve lake and river water quality and they have done so of their own accord and not by any regulation from the province.

Premier Wynne in the legislature on Dec 16th declared a "respect for municipal government" and at the recent ROMA conference ministers' forum on Monday January 30th, has indicated a realization that "one size fits all legislation" does not always work in rural Ontario.

Minister Mauro, you have an opportunity here to demonstrate what the Premier has said and you can do so by withdrawing this proposed change.

The AMCTO has just released a report on "bearing the burden" that illustrates the ever rising administrative costs to Municipalities.

Proof of this ever increasing burden can be found in our tiny Municipality. We have no choice but to increase the size of our Municipal office to accommodate increased staff that is necessary to reply to the Province's demands.

Minister Mauro, we beg you, please rescind this proposed change at your earliest opportunity. Rural Ontario simply can not afford this redundant administrative burden.

Jim Gibson

Mayor – The Corporation of the United Townships of Head, Clara, and Maria

jg

THE CORPORATION OF THE UNITED TOWNSHIPS OF HEAD, CLARA & MARIA

Date: Friday, February 17, 2017 Resolution No.:17/02/17/008

Moved by: D. Gillis Seconded by: [illegible]

WHEREAS the Ministry of Municipal Affairs and Housing has proposed a change to the Building Code, B-08-09-03, requiring mandatory five year septic tank pump out and records retention by the owner;

AND WHEREAS that same change requires Municipalities to administer and enforce this change;

AND WHEREAS the change document fails to identify the administrative costs to Municipalities;

AND WHEREAS the change document fails to identify any transfer of Provincial funding to offset these downloaded costs;

AND WHEREAS many Municipalities already have bylaws to regulate septic systems especially near waterways;

AND WHEREAS the majority of homeowners pump out their septic tanks on a regular basis whether regulated to or not;

AND WHEREAS there are many more important issues on which to spend taxpayer's money than "enhancing" maintenance on existing functioning systems;

AND WHEREAS adequate legislation already exists to correct malfunctioning systems;

AND WHEREAS Premier Wynne stated on Monday, January 30th, 2017 at the ROMA conference that the Province recognizes that "one size fits all" solutions do not always work in rural Ontario;

THEREFORE BE IT RESOLVED THAT the Council of the United Townships of Head, Clara, and Maria does hereby request the Honorable Bill Mauro, Minister of Municipal Affairs, to rescind proposed Building Code change B-08-09-03;

AND FURTHER THAT a copy of this resolution is sent to the Honourable Kathleen Wynne, Premier of Ontario, the Honourable Bill Mauro, Minister of Municipal Affairs, Mr. Patrick Brown, Leader of the Progressive Conservative Party, Ms. Andrea Horwath, Leader of the New Democratic Party, and all Members of Provincial Parliament in the Province of Ontario.

AND FURTHER THAT a copy of this resolution is sent to the Association of Municipalities of Ontario (AMO), the Rural Ontario Municipal Association (ROMA), the Federation of Northern Ontario Municipalities (FONOM), and to all Ontario Municipal Mayors for consideration.

Carried ✓ Defeated _____ Mayor [signature]

Tay Valley Township

Hon Chris Ballard
Minister of Housing
17th Floor, 777 Bay Street
Toronto, Ontario M5G 2E5

December 20, 2016

Re: Proposed Ontario Building Code Change B-08-09-03
Mandatory 5 Year Septic Inspections

Dear Mr Ballard,

I am writing to you to express strong opposition to Proposed Ontario Building Code Change B-08-09-03 which would require septic systems to be inspected every five years. The Township agrees that inspecting septic systems and regular pumping maintenance are reasonable and desirable goals. In fact the Township has a mandatory septic inspection program for cottage properties on seven of its lakes whose Lake Association members have requested this program.

However, Tay Valley Township Council is concerned that 5 years is an arbitrary target. There is also concern that a simple pump out does not address maintenance issues. Five year pump outs will simply result in moving sewage from one location to another. The alternative of testing the tanks and judging the level of sludge present would result in a more evidence based approach reflecting actual conditions. It should include inspection of the septic system components (e.g., filters and baffles) which would address nutrient management, therefore, the longevity of the system would increase as the leaching field would be maintained.

Tay Valley Township Council has many questions about implementation:

- Where will the septage be taken for disposal?
- Where is there capacity for disposal?
- Will Tay Valley Township have to create capacity?
- Has the Ministry of Housing or Ministry of Environment and Climate Change done a capacity analysis for septage treatment by some type of catchment area, e.g. Lanark County or other smaller area?

Tay Valley Township
217 Harper Road, Tay Valley, Ontario K7H 3C6
www.tayvalleytwp.ca
Phone: 613-267-5353 or 800-810-0161 Fax: 613-264-8516

- Who will bear the costs? There are cost implications for residents. What happens when people can't afford the pump out? Will grants or loans be available?
- Will infrastructure funding from the province for package plants (communal septic systems)?

There are also cost implications for municipalities and/ or the septic office or Public Health Unit to verify pumping is occurring. Unless MAH creates an app for verification by the pumpers to send to the Townships, the Mississippi Rideau Septic System Office estimates it will require at least ½ a Full Time Equivalent position to monitor the paperwork and track or enforce compliance. Money spent on tracking compliance would be better spent as a no-interest loan to replace septic tanks or pay for the pump out.

In summary, the Township is opposed to mandatory septic pump outs on a 5 year arbitrary time frame rather than an evidence based approach through testing sludge levels. The Township is further opposed to mandatory septic pump outs until a more comprehensive implementation strategy has been identified by the province and agreed to by the Township.

Sincerely,

Keith Kerr
Reeve

cc Randy Hillier, MPP, Lanark-Frontenac-Lennox & Addington

Hon. Glen R. Murray, Minister of the Environment and Climate Change

RECEIVED
MAR 03 2017
Town of Tecumseh

ESSEX COUNTY AGRICULTURAL HALL OF FAME

c/o Gerald Herdman
Secretary-Treasurer
6565 Disputed Road
Windsor, Ontario
N9H 1X8

February 6th, 2016

To: All Representatives of Member Organizations and Individual Members of the Essex County Agricultural Hall of Fame

From: Dan Diemer, Chairperson
Essex County Agricultural Hall of Fame

Subject: **Agricultural Hall of Fame Annual Meeting/Induction**

Details: 2016 Income and Expense Statement, Induction Nominees

Annual Meeting

The Annual Meeting of the Essex County Agricultural Hall of Fame will be on **Monday, March 6, 2017 Essex Civic Centre, 7:00 p.m.** Please mark this date on your calendar. We have assumed that you are still your organization's representative to the Essex County Agricultural Hall of Fame but if another has taken on this position, please pass on this information.

Induction Ceremony

There will be for (5) individuals inducted at the twenty-second presentation of the Essex County Agricultural Hall of Fame. The Induction Ceremony will be on **Thursday, April 6, 2017, 7:00 p.m. at the Harrow Exhibition Hall.**

If you have any questions, please call Dan Diemer at 519-567-9919.

Ministry of Education

Minister

Mowat Block
Queen's Park
Toronto ON M7A 1L2

Ministère de l'Éducation

Ministre

Édifice Mowat
Queen's Park
Toronto ON M7A 1L2

Ontario

March 6, 2017

Dear Colleagues,

It will come as no surprise that, over the past several months, our government has been hearing from many parts of Ontario about the impacts of recent pupil accommodation reviews, particularly in Ontario's rural and remote communities. Our government supports and values all communities in Ontario, and our school boards and municipalities must make every effort to work together to ultimately support positive experiences for our students and the communities they live in.

As you know, school closures and consolidations are among the most difficult decisions that school boards have to make. This is especially true in our rural and remote communities. Ontario entrusts school boards with the responsibility to review their school accommodation needs and for ensuring that student achievement and well-being are supported by all accommodation decisions that are made.

However, we also know that some parts of Ontario face demographic challenges, while others are seeing considerable growth. We want to assure all of our community partners that our government is committed to finding solutions to meet both local needs and the educational needs of Ontario's students.

Starting this spring, our government will launch an engagement on new approaches to supporting education in rural and remote communities. Three Parliamentary Assistants, MPPs Granville Anderson, Grant Crack, and Lou Rinaldi, will gather feedback on how our province can further strengthen the future of rural education. We are also pleased to provide you with an update on how our government will further support local decision-making and complete communities moving forward.

Pursuing Joint-Use Opportunities between School Boards

Communities and the province expect Ontario's four school systems to maximize the opportunities of co-location. Prior to commencing with student accommodation changes through closures, it is our government's strong preference that school boards fully explore joint accommodation arrangements with coterminous boards, particularly to maintain a school presence in a rural or isolated community. Of the 4,900 schools in Ontario, only 37 are currently joint-use arrangements in which pupils from one or more boards share a facility.

.../2

In July 2013, prior to the launch of the Ministry of Education's 2014 Capital Priorities program, the Ministry stated a preference for these joint-use projects, committing to review these proposals before any others. Additionally, the Ministry of Education has committed $600,000 to assist school boards in pursuing joint-use school opportunities between school boards. This funding is being allocated to support school boards with facilitation and joint planning towards the potential development of joint-use school proposals, as well as on studies being commissioned by the Ministry of Education to highlight joint-use experiences and develop a joint-use school toolkit that can be used to assist school boards in developing joint-use schools.

Moving forward, the Ministry of Education will be reviewing all capital proposals submitted by school boards for ministry funding for new schools, additions or consolidation projects to ensure joint-use opportunities between boards have been fully explored before funding is granted.

Importance of School Board and Municipal Partnerships

We have recently had the pleasure of speaking with many of our municipal and school board partners. These conversations have highlighted many positive examples of collaboration and joint local planning between school boards and municipalities. But we have also heard about potential inconsistencies and difficulties in current community collaboration, including instances where municipalities and communities have not felt meaningfully engaged in pupil accommodation reviews. These difficulties can arise for many reasons, but we would like to remind school boards and municipalities of the tools we have provided to facilitate an effective process and provincial expectations with respect to engagement by involved parties:

- **Annual Community Consultation:** Reforms to Ontario's *Planning Act* and *Development Charges Act* were made in 2015 to help create more complete communities and to provide citizens a greater, more meaningful say in how their neighbourhoods grow. The Ministry of Education's Community Planning and Partnerships Guideline was also introduced in 2015 to ensure that each school board hosted at least one meeting each year to discuss their capital plans and opportunities for joint planning and facility partnerships with relevant communities and stakeholders. We have heard from some boards that these meetings are not well attended, and from some communities that they were not aware of them. It is imperative that these meetings involve all relevant stakeholders, and facilitate real dialogue between boards and the involved communities. Further, board policies must reflect this guideline prior to the commencement of new accommodation reviews. To be effective, these meetings require community engagement and attendance and a spirit of real partnership from all parties.

.../3

- **Pupil Accommodation Review Guideline:** Updates to the Pupil Accommodation review guideline in 2015 were introduced following consultations with school boards, municipalities and other community partners to enable a more effective review process. This included a new requirement that impacted municipalities and community partners are consulted regarding the potential accommodation changes. It is our expectation that this is a meaningful engagement from both boards and municipalities, and that full input and feedback from the municipalities, including local economic and community impacts where relevant are reflected in the final staff report and advice to trustees. The new process also requires boards to put forward concrete proposals in the form of initial staff recommendations. These should not be interpreted as pre-determined outcomes, but rather as a means to ensure focused engagement.

Our government expects school boards and communities to be making active and continual efforts to facilitate positive, inclusive relationships with each-other.

The changes made in 2015 to the Pupil Accommodation Review Guideline also changed the minimum requirement for the school information profiles shared at the commencement of an accommodation review to no longer require information outlining the value of the school to the local economy. This change was made to reflect input from school boards that this information was not readily available or in their area of expertise and could be better reflected in the input from municipal and community partners.

While accommodation decisions must support student achievement and well-being as a primary goal, this change was not intended to discount the importance of engagement with communities to understand the impact of accommodation changes or to disallow boards from considering the impacts on communities and local economies from their final reports or deliberations.

Going forward, our government will be considering how community impact could be included in the pupil accommodation process, included with anticipated impacts on student achievement, transportation and outcomes. We will work with municipalities and school boards to explore how the government can best support this type of analysis in the pupil accommodation review process.

Enabling Community Hubs in Schools

Through the Premier's special advisor Karen Pitre, our government has been considering how we can use public property in a manner that takes into account the best interests of local communities. A community hub can be a school, neighbourhood centre or other public space that offers co-ordinated services such as education, early years support, health care and social services.

.../4

Many schools have some space that is or could be used by community organizations through lease or other arrangements when the space is not required for school use. The province has encouraged school boards to work with local communities and in 2015 released the Ministry of Education's Community Planning Partnership Guideline to help facilitate these opportunities.

We have also made a number of investments to support this goal, including:

- **Capital Funding for Community Hub School Retrofits:** The Ministry of Education announced $50 million in November 2016 to support retrofits of available school space for use by new community partners, or improve accessibility for schools to enable community use.
- **Capital Funding for Community Replacement Space:** In the event that an original school location that housed community partnerships is closed or sold, capital funding will be available for replacement space for eligible community partners in new schools, additions or retrofits to existing schools. Details regarding eligibility for this new program will be announced ahead of the Ministry of Education's 2017 Capital Priorities program request for submissions.

Surplus schools have also been identified as potential community hubs in some communities, and our government is serious about taking the next steps on this strategy:

- **New Rules for Disposition or Lease of Surplus Property:** Changes to O. Reg. 444/98 doubled the current minimum surplus school circulation period from 90 to 180 days, and expanded the list of organizations that can place an offer before surplus school property is placed on the open market. This is intended to enable potential community hub projects to reuse surplus school properties where there is a viable business plan and identified partnerships necessary to develop a community hub
- **Disposition of Surplus School Board property:** In 2017-18, we will also be proceeding with the recommendation in the Community Hubs Strategic Framework and Action Plan to consider supporting the sale of surplus schools at less than fair market value, where there is a provincial interest to enable viable community hubs, while keeping school boards whole.
- **Community Hubs Summit:** We are also pleased to announce that the Ontario Community Hubs Summit will be held from May 1-3, 2017, which will feature keynote speakers, hands-on workshops and opportunities to interact with and learn from others.

…/5

Recognizing that planning for strategic partnerships cannot be developed quickly or easily, in instances where communities and school boards see innovative solutions to local needs with opportunities for potential community hubs in school properties involved in accommodation reviews, we are requesting that school boards and municipalities with opportunities advise the Ministry of Education's Capital Policy and Programs Branch and the Ministry of Infrastructure's Community Hubs Division at community.hubs@ontario.ca preferably before the Community Hubs Summit. We will endeavor to work with the partners to ensure that these opportunities are considered within existing resources. In some cases, this could include providing facilitation services that would help community organizations, municipalities, and school boards develop their proposals for community hubs.

Enhancing Education in Rural and Remote Communities

Ontario's rural and remote communities have been impacted by a diversity of socio-economic trends. We also know that the future will not look like the past. For our rural communities to thrive, our government knows that students must be supported by high-quality education, strong local community programming, and innovative local economic strategies. That's why we've taken the following actions to support our rural and remote schools:

- **Supporting Broadband Expansion:** Our government is moving forward with its commitment in the 2016 Ontario Budget to provide secure, affordable broadband access to all of Ontario's students and educators, especially in northern and remote parts of Ontario, to enable equitable access to rich and innovative learning opportunities.
- **Supporting E-Learning Opportunities:** Our government provides secure access to the provincial Virtual Learning Environment which supports delivery of eLearning courses that otherwise might not be available close to a student's home. Additionally, we are investing over $6 million for distance learning delivery by the Independent Learning Centre of TVO that helps students from a variety of backgrounds gain necessary education credentials. Together these support equitable and timely access to credit courses.
- **Remote & Rural Funding Support for School Boards:** We have made the education funding formula less dependent on enrolment. Since 2012-13, annual GSN funding for rural boards has increased by nearly $200 million or 5.7 per cent. In addition, we have made the following changes the funding formula to meet the unique needs of rural and remote communities:
    - Increased funding to support the higher cost of purchasing goods and services for small and rural school boards;

.../6

- Investments in top-up supports for rural schools to fund the heating, lighting and maintenance costs of excess spaces in schools that are a considerable distance from the next closest school;
- Introduced new factors that reflect distance and dispersion of schools in the distribution of special education funding;
- Funding for additional principals in schools that combine elementary and secondary students, depending on enrolment levels; and
- Funding to support a minimum number of teachers and early childhood educators for remote schools with small enrolment.

It is our hope that our engagement this coming spring will allow us to highlight further opportunities that will proactively enhance the quality and delivery of education in rural and remote communities in Ontario. We will work with our partners to finalize the details of this engagement process and share these in the coming weeks.

Conclusion

There are a number of initiatives across government that are working to ensure that we have complete communities – whether they are urban, rural, northern or remote. Each community has different needs and together we need to make sure we are working together.

We welcome your thoughts and suggestions as we continue to evolve to meet the changing demographics and needs of our communities.

Sincerely,

[Original Signed by] *[Original Signed by]*

Hon. Mitzie Hunter Hon. Bob Chiarelli

cc: Hon. Bill Mauro, Ontario Ministry of Municipal Affairs
Hon. Jeff Leal, Ontario Ministry of Agriculture Food and Rural Affairs
Association of Municipalities of Ontario
Rural Ontario Municipal Association
Ontario Catholic School Trustees' Association (OCSTA)
Ontario Public School Boards' Association (OPSBA)
L'Association des conseils scolaires des écoles publiques de l'Ontario (ACÉPO),
L'Association franco-ontarienne des conseils scolaires catholiques (AFOCSC);

MUNICIPAL PROPERTY ASSESSMENT CORPORATION

March 7, 2017

To: Heads of Council, Chief Administrative Officers,
Finance Officers, Treasurers and Tax Collectors

From: Carla Y. Nell
Vice President, Municipal & Stakeholder Relations

Subject: Assessing Properties in Proximity to Industrial Wind Turbines

I would like to take this opportunity to share an update on a recent study published by the Municipal Property Assessment Corporation (MPAC).

We heard from Ontarians that they wanted more information about the impact of Industrial Wind Turbines (IWT) on property values. Given MPAC's legislative mandate to assess properties in Ontario, our assessors continually monitor influences on property value and recently conducted a comprehensive study to ensure that the assessments of properties in proximity to IWTs are fair and accurate.

Our findings concluded that the 2016 Current Value Assessments (CVA) of properties within five kilometres of an IWT are assessed at their current value and are equitably assessed in relation to homes at greater distances.

Our findings are consistent with the 2008 and 2012 CVA reports from MPAC and have been confirmed by Robert J. Gloudemans, an internationally recognized expert in the field of mass appraisal and ratio studies. The full report is available on mpac.ca under Property Types, Industrial Wind Turbines.

If you are interested in learning more about the 2016 base year study, I encourage you to join one of our information webinars. The agenda will include a review of the study and key findings.

To register for this event, simply select your preferred date below, click on it and send it. Shortly thereafter, you will receive an appointment for the respective date including the webinar details. Capacity for each call is limited so we encourage you to RSVP as soon as possible so that we can effectively manage demand.

Monday, April 3rd: 2:00 p.m. – 3:00 p.m.
Thursday, April 6th: 11:00 a.m. – 12:00 p.m.

If you have any questions, please contact your local Municipal & Stakeholder Relations Account Manager.

Yours truly,

Carla Y. Nell
Vice-President, Municipal and Stakeholder Relations

Copy Regional and Account Managers,
Municipal and Stakeholder Relations

MUNICIPAL PROPERTY ASSESSMENT CORPORATION

March 9, 2017

To: Mayors and Members of Council,
Chief Administrative Officers, Finance Officers,
Clerks, Treasurers and Tax Collectors

From: Carla Y. Nell
Vice President, Municipal & Stakeholder Relations

Subject: 2017 Municipal Stakeholder Research

Following the delivery of the 2016 Assessment Update last year, the Municipal Property Assessment Corporation (MPAC) is looking forward to building its next four-year strategy and the delivery of the next province-wide Assessment Update in 2020.

An important focus for us this year is seeking and collecting input from our key stakeholders. As a result, MPAC will be conducting a survey to measure both elected and non-elected officials' views of MPAC's performance as it relates to your municipality. We understand that each municipality has unique attributes and needs. We want to understand how we can better collaborate with you and serve staff in your municipality.

Over the coming weeks, you may receive a call or email from Ipsos requesting your participation in a telephone interview or online survey. Please note that all of the information you provide in the survey will be kept strictly confidential by Ipsos, and your responses will be reported in aggregate only.

Some of you may recall that MPAC wrote to you in 2015 about the importance of hearing from you directly and asked you to participate in the benchmark survey. This survey will serve to follow up on that work. I would like to thank you in advance for taking the time to provide your feedback. If you do not receive a call or email from Ipsos within the next few weeks but wish to participate in the 2017 study, please contact your local Municipal & Stakeholder Relations Account Manager by no later than March 31.

We look forward to continuing to partner with you to serve Ontario's municipalities in the future.

Yours truly,

Carla Y. Nell
Vice-President, Municipal and Stakeholder Relations

Copy Regional and Account Managers

1340 Pickering Parkway, Suite 101, Pickering, ON L1V 0C4
www.mpac.ca

Operation Lifesaver
901 - 99 Bank Street
Ottawa, Ontario K1P 6B9
Telephone (613) 564-8097
Fax (613) 567-6726
E-mail admin@operationlifesaver.ca

Opération Gareautrain
901 - 99, rue Bank
Ottawa, Ontario K1P 6B9
Téléphone (613) 564-8097
Télécopieur (613) 567-6726
Courriel admin@operationlifesaver.ca

January 31, 2017

RECEIVED
FEB 07 2017
Town of Tecumseh

Office of the Clerk
Town of Tecumseh
917 Lesperance Road
Tecumseh, ON N8N 1W9

Dear Sir / Madam:

Canada's 15th annual ***Rail Safety Week*** will be held from April 24 to 30, 2017. As you know, the purpose of this national event is to raise awareness about rail safety, and to highlight the ongoing commitment of communities such as yours, along with rail companies and their employees, in making Canada's rail network even safer.

Last year, your council joined the safety efforts of many other Canadian municipalities by adopting a resolution in support of ***Rail Safety Week***. Once again this year, **Operation Lifesaver** is proud to be supporting the rail safety activities and events that will be taking place across the country throughout this important week. These events will emphasize the need for railways, communities and members of the public to work together to prevent the avoidable accidents, injuries and damage caused by collisions at level crossings, and incidents involving trains and citizens.

Your council can continue to be a powerful ally for our public awareness campaign by adopting the enclosed draft resolution to support ***Rail Safety Week*** in your community. Should you require additional information about Operation Lifesaver and rail safety, please consult www.operationlifesaver.ca.

Thank you in advance for your continued support of ***Rail Safety Week***. We would greatly appreciate it if you would send us a copy of your resolution, and keep us informed of how you will be promoting rail safety in your community this year.

Sincerely,

Stephen Covey
President
Operation Lifesaver

Sarah Mayes
National Director (Interim)
Operation Lifesaver

Encl.

Operation Lifesaver is a national rail safety program, sponsored by Transport Canada and the Railway Association of Canada, that works to save lives by educating Canadians about the hazards of railway crossings and trespassing on railway property.

Opération Gareautrain est un programme national de sécurité ferroviaire parrainé par Transports Canada et l'Association des chemins de fer du Canada, qui vise à sauver des vies en informant les Canadiens des dangers posés par les passages à niveau et les intrusions sur le domaine ferroviaire.

(Draft Resolution)

RESOLUTION IN SUPPORT OF PUBLIC - RAIL SAFETY WEEK

Whereas ***Public - Rail Safety Week*** is to be held across Canada from April 24 to 30, 2017

Whereas it is in the public's interest to raise citizens' awareness on reducing avoidable accidents, injuries and damage caused by collisions at level crossings or incidents involving trains and citizens;

Whereas Operation Lifesaver is a public/private partnership whose aim is to work with the rail industry, governments, police services, the media and other agencies and the public to raise rail safety awareness;

Whereas Operation Lifesaver has requested City Council adopt this resolution in support of its ongoing effort to save lives and prevent injuries in communities, including our municipality;

It is proposed by Councillor _____

seconded by Councillor _____

It is hereby **RESOLVED** to support national ***Public - Rail Safety Week***, to be held from April 24 to 30, 2017.

TOWNSHIP OF ZORRA

274620 27th Line, PO Box 306, Ingersoll, ON, N5C 3K5
Ph. (519) 485-2490 · 1-888-699-3868 · Fax: (519) 485-2520

March 1, 2017

Honourable Kathleen Wynne, Premier of Ontario
Legislative Building - Room 281
Queen's Park
Toronto, ON M7A 1A1

Dear Premier Wynne:

Please be advised the Council of the Township of Zorra passed the following resolution at its February 14, 2017 regular meeting:

"WHEREAS, Automated External Defibrillators are used to treat sudden cardiac arrest and have been proven to be life-saving during the waiting time period for emergency services;

AND WHEREAS, for every minute a person in cardiac arrest goes without being successfully treated by defibrillation, the chance of survival decreases by 7 percent in the first, and decreases by 10 percent per minute as time advances past 3 minutes;

AND WHEREAS, Andrew Stoddart, a 15 year old boy, passed away while playing soccer in Kintore, Ontario, an AED on site may have increased his odds of survival. Andrew's Legacy foundation has currently purchased 22 AEDs for across Oxford County, including all three elementary schools in Zorra Township;

AND WHEREAS, Thames Valley District School Board has yet to put together a policy for having AED's in place in all, or any, of their public elementary and secondary schools;

THEREFORE BE IT RESOLVED THAT the Township of Zorra requests that the Premier, and Minister of Education, develop a policy that enables all schools and school boards in Ontario, including the Thames Valley District School Board, that allows individual elementary and secondary schools to have an AED installed in their schools;

AND THAT the Township of Zorra request that the Thames Valley District School Board and all other schools in Ontario develop a policy to install AEDs in all schools in Ontario as soon as possible for the safety of our children.

AND THAT this resolution be sent to the Premier, Minister of Education, AMO, Thames Valley District School Board; and all Ontario Municipalities for consideration and support."
Disposition: Carried

If you have any questions, please do not hesitate to contact me.

Yours truly,

Karen Martin
Clerk

cc: Minister of Education
Association of Municipalities of Ontario (AMO)
Thames Valley District School Board
All Ontario Municipalities

17-011

From: AMO Communications <communicate@amo.on.ca>
Date: March 7, 2017 at 6:07:58 PM EST
Subject: 2017 Asset Management Symposium - Limited space left!

2017 Asset Management Symposium
April 4 and 5, 2017
Holiday Inn Toronto International Airport, 970 Dixon Road, Toronto

The Asset Management Symposium continues to be the premier professional development event for those involved in municipal asset management. The Symposium provides a rich learning environment for elected officials and municipal staff to learn in a collaborative and interactive forum. The goal of the event is to provide access to cutting-edge research, best practises and more for attendees to take back to their municipalities.

So why attend? Simply, to get the tools and knowledge to be able to ask and answer the right questions when it comes to Asset Management at YOUR municipality!

Come to:

- Listen to a varied roster of asset management speakers
- Learn about updates in beneficial federal and provincial policies, plans and projects
- Find out how to ensure that you link overall service levels with your asset management plan
- Gain insights into best practices for refining, funding and implementing your long-term asset management strategy
- From getting buy-in for asset management to ways overcoming resistance to change, learn how to transform your initiative into an accepted standard operating procedure

This is the Asset Management Symposium developed specifically for municipalities. Check out the full program at http://www.amo.on.ca/Events/AMS/Programming and register online or download the registration form today from our site today! Space is limited and is filling up fast. This is an event that you do not want to miss!

DISCLAIMER: Any documents attached are final versions. AMO assumes no responsibility for any discrepancies that may have been transmitted with this electronic version. The printed versions of the documents stand as the official record.

OPT-OUT: If you wish to opt-out of these email communications from AMO please Click Here.

AMO Association of Municipalities Ontario

From: Paul McCann
Sent: March-07-17 9:34 PM
To: Gary McNamara
Subject: Snowbirds Flypast of Tecumseh

Dear Mr. McNamara,

The Canadian Forces Snowbirds will be participating in an air display at Windsor International Airport on May 27-28, 2017. As part of this event, we are requesting that the Snowbirds participate in a flypast of neighbouring municipalities. To get the necessary approval, we require a letter authorizing the Snowbirds to overfly Tecumseh. This letter must be on official letterhead and include the phrase "as low as 500 feet". This letter does not guarantee their participation or that the Snowbirds will overfly at 500 feet.

For your convenience, I have attached a draft sample letter for your review and consideration. If approved by the Snowbirds, we will coordinate a date and time for the flypast with you.

To meet Snowbird planning timelines, we are asking that you return this letter to us no later than **March 13**, **2017.**

Should you have questions or concerns, please feel free to contact me anytime.

Thank you.

Sincerely,

Paul McCann
Director, Airshow YQG

MINUTES OF A MEETING OF THE SENIOR ADVISORY COMMITTEE FOR THE TOWN OF TECUMSEH

A meeting of the Senior Advisory Committee (SAC) for the Town of Tecumseh was held on Thursday, February 23, 2017, in the Council Chambers at Town Hall, 917 Lesperance Road, Tecumseh at the hour of 6:00 p.m.

(SAC 2-1)
ORDER
The Chair calls the meeting to order at 6:01 p.m.

(SAC 2-2)
ROLL CALL

Members Present:	Chair	- Doug Drouillard
	Member	- Dara Pfeifer O'Connor
	Member	- Nancy Tennant
	Member	- Michelle Philion
	Vice-Chair	- Paul Morand
Also Present:	Deputy Clerk	- Christina Hebert
Absent:	Member	- Don Crowder

(SAC 2-3)
DISCLOSURE OF PECUNIARY INTEREST
None Reported.

(SAC 2-4)
DELEGATIONS
Life After Fifty – Jill Cadarette, Director of Programs & Services
Ms. Jill Cadarette, Director of Programs and Services provides the Members with an overview of Life After Fifty (LAF). LAF is a non-profit organization and a registered charity in Windsor-Essex. LAF is designed as a recreation centre for adults age 50+ and serves older adults in the Windsor-Essex community. LAF has an average of 200 visitors per day, with approximately 80+ regularly scheduled programs each week.

She further highlights the programs and services offered by LAF. LAF provides a large array of fun and interesting educational, recreational, physical and social programs, classes, activities and workshops. The programs are designed to promote active aging and provide multiple opportunities for older adults in the community to improve mental and physical health and well-being. The wellness services are designed to improve health and safety and allow older adults to continue to age successfully and independently at home.

There are two convenient locations, namely; McEwan Street Centre and East Side Centre [WFCU], to serve the Windsor-Essex community. Membership is $150 annually which covers a wide variety of programs and services. Alternatively, non-members may purchase a $5/day pass.

In response to an inquiry regarding establishing a LAF chapter in Tecumseh, Ms. Cadarette advises that many factors, including funding and logistics would have to be explored prior to determining the possibility of creating a Tecumseh chapter. She suggests firstly investigating pilot options to partner with LAF and gaging the interest of the community.

Ms. Cadarette welcomes and encourages the Members to tour both locations to see the facility and programs/services offered. The Members are interested in coordinating a tour, noting Tuesday's and Thursday's are not convenient.

(SAC 2-5)
COMMUNICATIONS
Minutes
a) Senior Advisory Committee Meeting held January 26, 2017

Motion: (SAC 06/17) Moved by Member Nancy Tennant
Seconded by Member Dara Pfeifer O'Connor
THAT the Minutes of the Senior Advisory Committee meeting held January 26, 2017, be approved.
Carried

Communication for Information
b) Seniors Grant Program Guidelines

The Deputy Clerk reminds the Members about the potential funding opportunity under the Seniors Community Grant Program (Program). The Program is solely dedicated to helping seniors, which will encourage greater social inclusion, learning, volunteerism, and community engagement.

The Committee has expressed an interest in exploring partnership opportunities with LAF. It is recommended that the Committee make application for the Program, in support of this partnership project with LAF.

The Deputy Clerk notes the submission deadline to make application is March 3, 2017. Additionally, all projects approved under the Program must have a start date of June 15, 2017 or later, and the project must be completed by March 31, 2018.

The Committee is agreeable with Administration completing the application.

Discussion ensues respecting other senior services offered in the community. Member Nancy Tennant explains Canterbury ElderCollege provides a variety of educational courses for ages 55 and better. As well as, Uni-Com which provides senior members of the community an opportunity to share continuing education and involvement in special projects with the assistance and support of the University of Windsor.

(SAC 2-6)
REPORTS
None.

(SAC 2-7)
UNFINISHED BUSINESS
Lighting at Lakewood Park
The Deputy Clerk apprises the Members that lighting at Lakewood Park is being explored by the Parks and Recreation Department.

(SAC 2-8)
NEW BUSINESS
Canada 150 Mosaic Project
The Deputy Clerk explains the Town will be participating in the Canada 150 Mural Mosaic project. In celebration of Canada's 150th birthday, a mural is being created amongst all provinces and territories, with over 80,000 paintings and 150 individual murals that if united will form one gigantic mural mosaic.

The Town will be given approximately 400 tiles to paint. The Canada Mosaic 150 team of artists and facilitators will come and work with members of the community to create an ultimate two-day painting event, scheduled for mid-June. Every tile painted will be 4 inches x 4 inches in size, creating a unified community mural. Administration is currently working with the Canada Mosaic 150 team to coordinate the details for the painting event.

The Town will be reaching out to all demographics within the community to participate in painting the tiles and seeking feedback for selecting the location of the mural once permanently assembled.

The Members view examples of completed Canada 150 Mosaic Murals on the Canada 150 website.

The mural mosaic will serve as a legacy piece for decades to come.

Tecumseh Coffee House

The Deputy Clerk advises the Tecumseh Cultural and Arts Advisory Committee, in partnership with l'Essor High School, will be hosting a 'Coffee House' event on Friday, May 12, 2017, from 7:00 pm to 10:00 pm. The Coffee House will take place in the Tecumseh – l'Essor Arts Centre.

The Committee is excited to be hosting this community event for individuals to share their stage talents with area residents in a coffee house setting. All ages are welcome and the Committee is looking for a diverse range of talent – vocals, instrumental, dance, readings, theatrical groups, etc. – to showcase and celebrate local talent.

Interested performers will need to submit a completed Registration Form by Friday, March 31, 2017.

The Members are encouraged share the information with persons who may be interested in performing and help promote the event.

Event Location

In response to a query, the Members are advised that the Town hosts events, activities, meetings, etc., in both the 'north and south' end of the municipality, where feasible, for the residents.

(SAC 2-9)

NEXT MEETING

The next meeting of the Senior Advisory Committee will be held Thursday, March 23, 2017 at 6:00 p.m.

(SAC 2-10)

ADJOURNMENT

Motion: (SAC-07/17) Moved by Vice-Chair Paul Morand
Seconded by Member Michelle Philion

THAT there being no further business, the February 23, 2017, meeting of the Senior Advisory Committee be adjourned at 7:11 p.m.

Carried

_____
Doug Drouillard, Chair

_____
Paul Morand, Vice-Chair

MINUTES OF A MEETING OF
THE CORN FESTIVAL COMMITTEE
FOR THE TOWN OF TECUMSEH

DRAFT NOT YET APPROVED BY COMMITTEE

A meeting of the Corn Festival Committee for the Town of Tecumseh was held on Thursday, February 23, 2017, at the Tecumseh Recreation Complex & Arena, 12021 McNorton Street, Tecumseh, Ontario, at 6:30 p.m.

(CF 2-1)
CALL TO ORDER

Chair calls the meeting to order at 6:33 p.m.

(CF 2-2)
ROLL CALL

Present:	Executive Member	Anthony Corona
	Executive Member	David Lozinsky
	Executive Member	Jillian Parent
	Executive Member	Lawrence Pickle
	Executive Member	Leslie Furlan
	Executive Member	Ron Matysek
	Executive Member	Virginia Lopez
Also Present:	Councillor Liaison	Joe Bachetti
	Councillor Liaison (Alternate)	Andrew Dowie
	Director Corporate Services & Clerk	Laura Moy
	Director Parks & Recreation	Paul Anthony
	Manager Recreation Programs & Events	Kerri Rice

(CF 2-3)
DISCLOSURE OF PECUNIARY INTEREST
None declared.

(CF 2-4)
DELEGATIONS AND COMMUNITY PARTNERS
a) Mike Hutnik and Ken Fauteux Grand Knight, Tecumseh Knights of Columbus are in attendance.
- Entertainment is in place.
- Jim Chute will attend future meetings and provide more updates.

(CF 2-5)
COMMUNICATIONS

a) Corn Festival Committee Minutes, January 26, 2017

Motion: (CF-08/17) Moved by Member Ron Matysek
Seconded by Member Jillian Parent
That the January 26, 2017 Corn Festival Committee Minutes as presented, be adopted.
Carried

(CF 2-6)
REPORTS

a) Committee Chair

i. Committee Member Vacancies
- 5 applications received
- In accordance with the Committee's direction (CF-05/17), the Chair met with each applicant to ensure they are willing and able to commit to the

DRAFT

responsibilities as a Committee Member. The Manager Recreation Programs & Events was in attendance for each meeting.

- One applicant indicated they were not interested in a voting position but rather interested in volunteering during the festival weekend such as Event Staff (parking, admissions); the remaining four indicated they would serve on the Committee as a volunteer.
- Of the four remaining applicants, the Chair and Manager Recreation Programs & Events ranked the applicants using a set evaluation criteria. Two had strengths in Entertainment and Fund Raising. Evaluations were explained by the Chair.

Motion: (CF-09/17) Moved by Member Tony Corona
Seconded by Member Ron Matysek

That New Business Item 2.8 a) be moved forward for discussion.

Carried

a) Voting on Corn Festival Committee Applications and Recommendation to Council for Appointment

Motion: (CF-10/17) Moved by Member Tony Corona
Seconded by Member Ron Matysek

That John Parent and Phil Kane be recommended to Town Council to fill the two (2) vacant positions on the Corn Festival Committee; and

That Kathy Buconjic, Bernarda Doctor, and Karl Barnard be invited to assist the Corn Festival Committee.

Carried

ii. Committee Portfolios

- Chair reviewed festival requirements and established nine (9) portfolios that include an equal distribution of responsibility
- Manager Recreation Programs & Events will be updating and forwarding portfolio packages to each member that will include a list of items to be completed along with budget details
- Chair and Manager Recreation Programs & Events will schedule individual meetings with Committee Members to review the portfolio requirements
- Deputy Mayor Joe Bachetti offers to help with the vendor layout
- Councillor Andrew Dowie offers to help with the Committee Liaison Group

iii. 2017 Committee Meeting Schedule

- Included in the agenda is the meeting schedule for 2017
- Chair reminds members that they are to reply to emails to confirm their attendance at meetings or to advise if they are unable to attend.
- Reminder that all committee members are to attend training on August 14

(CF 2-7)
UNFINISHED BUSINESS
None.

(CF 2-8)
NEW BUSINESS
Moved to Reports Item a) i.

(CF 2-8)
NEXT MEETING
The next meeting of the Tecumseh Corn Festival Committee will be scheduled Thursday, March 23, 2017, at 6:30 pm.

DRAFT

(CF 2-9)

ADJOURNMENT

Motion: (CF-11/17) Moved by Member Larry Pickle
Seconded by Member Jillian Parent

That the February 23, 2017 Festival Committee meeting be adjourned at 7:15 p.m.

Carried

_____

David Lozinsky, Chairperson

THE CORPORATION OF THE
TOWN OF TECUMSEH

Chief Administrative Officer
Report No. 03/17

TO:	Mayor and Members of Council
FROM:	Chief Administrative Officer
DATE OF REPORT:	February 27, 2017
DATE TO COUNCIL:	March 14, 2017
SUBJECT:	Strategic Priorities 2017-2018

RECOMMENDATIONS

It is recommended that:

1. The five [5] Strategic Priorities set out in the attached report from StrategyCorp **be re-affirmed**; and

2. The CAO **be directed** to incorporate these strategic priorities into objectives and action plans as part of the municipal work plans; and further

3. Administration **provide** various reports, develop policies and assign resources to achieve the Strategic Priorities outlined in this report; and furthermore

4. Progress on these priorities **be provided** in six [6] month intervals.

BACKGROUND

At a Strategic Planning and Priority Setting Session, senior management staff briefed Council on Town initiatives and practices. Council members offered their perspectives and feedback. An external facilitator supported staff in collating the information. This information has been synthesized in the attached document into overarching strategic goals that are supported by priority areas of focus and strategic action items that can facilitate implementation.

Overview of Strategic Goals

The Town's Strategic Priorities form the framework for municipal policies and direction, work plans and resource allocations. The 2017-18 Strategic Planning Session [Session] was held on January 17, 2017 at Torino's. In attendance were members of Town Council and the Senior Management Team. The facilitator for this session was Mr. Michael Fenn, Senior Advisor, StrategyCorp, assisted by Lesley Racicot, Manager Strategic Initiatives, Town of Tecumseh.

As a preliminary component of the Session, Mr. Fenn held teleconference interviews with members of Town Council. The purpose of the interviews was to provide an opportunity to review accomplishments and to discuss expectations of the Session and for the term of Council. The discussions were to specifically address members' perceptions of current issues and future directions that the Town should be considering as they plan for the last year and a half of their term in office.

In addition, interviews were held with members of the Senior Management Team.

COMMENTS

The results of the Session and interviews are captured in the attached report from StrategyCorp, which outlines the priorities and activities to the end of 2018. Updates are indicated in bold type.

Conclusions
It is recommended that the five [5] Strategic Priorities listed in the attached report along with the associated list of "Priority Areas of Focus" be re-affirmed. Additional action items were identified at the session and are outlined in bold in the attached report. It is recommended that these additional action items be accepted. The Strategic Priorities identified by the group involve initiatives that are manageable to implement and will benefit existing residents, businesses and visitors while at the same time focusing on attracting new investment and development.

As priorities are not intended to communicate everything that the Town plans to achieve by the end of 2018, they should not be static; if the strategic environment changes, then priorities may need to be adjusted. Progress reports on the implementation of the strategic actions and priorities will continue to be provided to Council semi-annually.

Finally, it is critical that the leaders of the municipality, both elected and administrative, understand the priorities when considering the policies and future direction of the municipality. The elements of a strategic document identify the Town's priorities, which in turn provide the framework for the allocation of funds, development of work plans, reports and dedication of resources.

CONSULTATIONS

Mr. Michael Fenn, Senior Advisor, StrategyCorp

FINANCIAL IMPLICATIONS

No financial implications at this time. However, budget resources will be required as specific action items are addressed.

LINK TO STRATEGIC PRIORITIES

As indicated, the 2017-18 Strategic Priorities identified at this Session will become the guidelines until the end of 2018 with review following.

COMMUNICATIONS

Not applicable ☐

Website ☒ Social Media ☐ News Release ☐ Local Newspaper ☐

This report has been reviewed by senior Administration as indicated below and recommended for submission by the CAO.

Prepared by:

_____
Lesley Racicot
Manager Strategic Initiatives

Recommended by:

_____
Tony Haddad, MSA, CMO, CPFA
Chief Administrative Officer

Attachment (s): 1. Town of Tecumseh, “Strategic Priorities Overview”, February 2017
lr

TOWN OF Tecumseh
ONTARIO · CANADA

STRATEGIC PRIORITIES OVERVIEW

March 2017

INTRODUCTION

The Town of Tecumseh is a recognized leader in using strategic planning to deliver results to its residents and taxpayers. The Town has used previous strategic plans to ensure that the issues that are important to the community and its future receive the attention they deserve. In Tecumseh, priorities are established, integrated into its budgets and plans, and reviewed throughout the Council term.

Once a strategic plan is adopted by Council, the issues and topics covered by the strategic plan will be discussed on an individual basis at Town Council, with input from residents. Senior management staff will also reflect the strategic plan in their reports to Council, their work programs and budget proposals, and in allocating talent and resources.

BACKGROUND

At a Strategic Planning and Priority Setting Session in January, 2017, senior management staff briefed Council on Town initiatives and practices. Council members offered their perspectives and feedback. An external facilitator supported staff in collating the information, based on interviews with each member of Council and each member of senior staff. This information has been synthesized into this document, identifying strategic goals and priority areas of focus for the balance of the Council term, and beyond.

ENVISIONING THE FUTURE & REAFFIRMING PRIORITIES

At a Strategic Planning and Priority Setting Session, Council members looked beyond the end of the current Council term of office, to consider a vision for the future of Tecumseh. They reflected on their mission as leaders and stewards of the municipal corporation and the community it serves, and on the values that should guide their work and decisions on behalf of current and future residents and businesses.

With that context in mind, this summary report departs from earlier documents that primarily identified strategic priorities and reported progress toward achieving those priorities. In keeping with the concept of strategic planning, this report proposes that the Town's decision-makers adopt a vision, a mission and values to guide and integrate the practical work of setting priorities and achieving results in a variety of areas.

It should be clear, however, that Council members expressed support and reaffirmation of the five existing Strategic Priorities, while identifying areas where new challenges await and new approaches need to be taken. This document endeavours to reflect and highlight those views.

In some instances, such as evaluating and reforming the ward system, the objective has largely been achieved. In others cases, new or modified initiatives are reflected in **bold type-face**. This document also introduces an Executive Summary of the Strategic Directions and their evolving context, along with a specific presentation of the Vision, Mission and Values of the municipal corporation of the Town of Tecumseh.

VISION

Building on today's actions, the Tecumseh of tomorrow will be a community of economic vitality, environmental leadership, and a high quality of life for all of our citizens.

VALUES

As a municipal government, Tecumseh values continuous improvement and innovation in its service-delivery, policy-making and program implementation. This is manifested in commitments to fiscal prudence, promoting economic vitality, and excellence in municipal management.

Tecumseh supports democratic values of good governance, accessibility and community involvement in public decision-making and service-delivery, including working with stakeholders, local organizations and other partners.

Tecumseh's political leadership and staff value equitable treatment of all Tecumseh residents despite their diverse needs, as well as an outward-looking, leadership role in the regional community of Essex / Windsor, to the benefit of all of our fellow citizens.

MISSION

In fulfilling our vision for the future, Tecumseh's mission is to act with a commitment to Smart Growth, sustainability, a strategic approach, and the principles of health and wellness.

GOALS

In setting Tecumseh's strategic goals, the Town aims to achieve Smart Growth, Sustainable Infrastructure, and embracing the principles of Health and Wellness in planning and delivering Town policies and services. In achieving its goals, the Town will employ the "best practices" of municipal good governance and continuous improvement.

EXECUTIVE SUMMARY

In the course of a discussion of Strategic Directions by members of Town Council and senior staff, a number of points of consensus or favoured approaches emerged. This Executive Summary outlines several of those conclusions.

- Consider the merits of holding one or more off-site Town Hall meetings or general interest public meetings each year, for all Town residents, to outline and to seek input on:
  - Both planned and approved major municipal projects and private development projects;
  - Policies, programs and services under review by the Town, including an explanation of their potential financial and service-delivery implications; and,
  - Emerging major issues or concerns, notably in planning, public works, environment, and public safety.

These meetings could be organized as Annual General Meetings or organized by groups of Wards, if more appropriate.

- As an alternative, the Town should hold more "interactive" Public Information Centres (PICs) on topics of community interest or related to new projects. These should move out of Town Hall to locations around town where residents congregate (like the night market or the Corn Festival), in order to achieve greater accessibility and greater levels of participation and interest.
- Based on the most recent community survey, satisfaction with existing Town services, user fees, and service-levels is high. In place of a general municipal services review, Town management will therefore focus on a more comprehensive approach to its existing "continuous improvement" efforts, as well as undertaking an organizational review, with a focus on continuing good managerial performance and on "succession planning" for key management positions over time.
- Since community support is the best barometer of community interest, the Town will continue to encourage voluntary organizations and other stakeholders to assume responsibility for organizing, operating and sustaining community events, rather than relying primarily on Town resources to deliver them.
- Council members are both legislators and community representatives. They need to balance those often conflicting public and legal obligations. While consultation and measured reflection are valuable and improve the quality of decision-making, the needs of the overall community frequently require decisive or definitive action and recognition of best interests of the Town as a whole, including both current and future residents and taxpayers. The new ward system should make a contribution to attaining that balance.
- The proposed Sportsplex has been identified as a priority item for Council and public consultation favours advancing the project. Council gave consideration to some of the conditions that would need to be in place for the project to succeed, including significant governmental and community financial support.

OVERVIEW OF STRATEGIC GOALS

What Tools the Town can Use

What the Town Aspires to Do

SMART GROWTH

Make the Town of Tecumseh an even better place to live, work and invest through a shared vision for our residents and newcomers.

SUSTAINABLE INFRASTRUCTURE:

Ensure that the Town of Tecumseh's current and future growth is built upon the principles of sustainability and strategic decision-making.

HEALTH & WELLNESS

Integrate the principles of health and wellness into all of the Town of Tecumseh's plans and priorities.

CONTINUOUS IMPROVEMENT:

Steward the Town's "continuous improvement" approach to municipal service delivery to residents and businesses.

GOOD GOVERNANCE

Demonstrate the Town of Tecumseh's leadership role in the community by promoting good governance and community engagement, by bringing together organizations serving the Town and the region to pursue common goals.

TRANSFORMING ASPIRATIONS TO ACTIONS

Strategic Goal #1: Make the Town of Tecumseh an even better place to live, work and invest through a shared vision for our residents and newcomers

Priority Areas of Focus	Strategic Action Items
Economic Development in Tecumseh	• Recognize the importance of revitalization to encourage vibrant and engaging commercial areas that provide a range of goods and services to residents and businesses **and to attract further investment and redevelopment.** • **Partner with existing local businesses and the BIA to assist with planning and development requirements, to accelerate opportunities for business expansion.** • Recognize the importance of the existing employment base and support opportunities for onsite expansion and relocation within Tecumseh. • Support employment attraction efforts in order to increase range of employment opportunities and encourage job creation. • Ensure Tecumseh is a desirable municipality to live, work and invest. • Support small business development and commercial success by sharing economic development information • **Identify opportunities in the energy and resource-recovery fields.** • **Partner with businesses, land-owners, utilities and other public authorities to generate economic activity and employment and / or reduce the cost of energy and environmental degradation.** • **Support small business development and success by sharing information from economic development agencies relevant to their activities.**
Tecumseh's Role as Part of a Region	• Explore ways to leverage benefits of regional growth and development, **including promoting the upgrading of Manning Road as a regional economic and transportation artery.** • Encourage Tecumseh to play a leadership role, in cooperation with other municipalities in the County, the City of Windsor, and across Southwestern Ontario, to promote economic growth and development. • For some issues designated by Council, which go beyond the mandate of the municipal corporation, the Council should play a leadership role for the community and in the region, convening organizations that serve the community and the region, in support of common goals and objectives.

Priority Areas of Focus	Strategic Action Items

Tecumseh's Development as a Sustainable Community	• Recognize the cultural and natural heritage of Tecumseh and leverage these attributes to create a sense of place and pride, for existing residents and newcomers, and to enhance Tecumseh's distinctive regional image.
	• Encourage a range of housing options in the context of new development.
	• **Explore opportunities to promote housing options that will appeal to young families and to active seniors with the new Official Plan.**
	• Create a development landscape that reinforces the character and attributes of Tecumseh.
	• Draw on the strengths of past activities in order to inform future decisions.
	• Support growth that enhances Tecumseh as a complete community.
	• **Bring forward an Energy Plan for the Municipal Corporation, including municipal buildings.**
	• **Consider developing a multi-faceted "Green Plan" for Tecumseh, including:**
	  ○ **Outlining alternative models of waste collection, waste reduction and waste diversion based on the successful experience of other municipalities,;**
	  ○ **Encourage community-wide energy conservation (and possibly energy generation and distribution);**
	  ○ **Implement improved community environmental protection (such as measures to promote conservation, and to make water, wastewater and stormwater systems more resilient and households less vulnerable to the global rise in "peak" weather events); and,**
	  ○ **Partner with local, regional, provincial and federal organizations to assist in encouraging residents and businesses to think and act "green".**

Strategic Goal #2: Ensure that the Town of Tecumseh's current and future growth is built upon the principles of sustainability and strategic decision-making

Priority Areas of Focus	Strategic Action Items
Tecumseh as a Fiscally Sustainable Town	• Ensure that "growth pays for growth". • Make efforts to align existing and new infrastructure plans with sound environmental policies, responsible fiscal considerations, and best practices (engineering, planning). • On an ongoing basis, review opportunities for budget efficiencies and accommodation of affected rate payers that can support long-term infrastructure maintenance and expansion. • **In developing plans to fund new infrastructure, review the Town's good experience with funding the full lifecycle cost of existing infrastructure:** ○ **Consider adding new categories of infrastructure not covered by the existing lifecycle approach; but also**

Priority Areas of Focus	Strategic Action Items
Tecumseh as a Fiscally Sustainable Town (Continued)	○ **Examine the need for reductions or increases in the level of contributions to individual reserves, based on past performance, changed projections and competing fiscal demands.** • **Have the vision to undertake major new infrastructure priority projects, such as the Sportsplex, the Tecumseh Road Community Improvement Plan or expansion of the trails and sidewalk networks:** ○ **By maximizing the financial contributions from government grants and transfer payments, and from community fundraising and private contributions; and,** ○ **By ensuring that more of the net cost of long-lived infrastructure is borne by** both current and future users.
Tecumseh's Role in Creating an Accessible Community	• Promote equity of access to municipal resources from all parts of the Town (geographic, demographic, physical accessibility, etc.). • Explore the feasibility of increasing the Town's telecommunications connectivity in its neighbourhoods and facilities. • **Wherever possible, implement opportunities for increased accessibility.** • **Identify and act proactively to comply with expanded legal obligations to meet the needs of those with accessibility needs.**

Strategic Goal #3: Integrate the principles of health and wellness into all of the Town of Tecumseh's plans and priorities

Priority Areas of Focus	Strategic Action Items
Strong and Stable Neighbourhoods	• Encourage growth that supports complete and liveable neighbourhoods for existing and future residents. • Improve the opportunities for increased connectivity within and between neighbourhoods (e.g. trail networks), to support an improved pedestrian and cycling environment. • **Make trails and trail connectivity a priority for the Town in its operating and capital budgets.** • Support a safe pedestrian environment for all residents. • Promote health and wellness goals within the neighbourhood planning context.
Comprehensive Community Services	• Facilitate targeted programming that responds to the needs and demographics of users. • Promote or support a wide range of indoor and outdoor recreation and leisure opportunities in order to encourage community development. • **Move ahead with planning for a community-building, multi-functional community Sportsplex, with the following considerations:**

Priority Areas of Focus	Strategic Action Items
Comprehensive Community Services (Continued)	○ **Examine the need for reductions or increases in the level of contributions to individual reserves, based on past performance, changed projections and competing fiscal demands.** ○ **Seek firm, prior assurances of capital grants from other governments, covering a majority of the capital cost of the facility;** ○ **Encourage compatible participation / contributions from institutional, non-profit or commercial partners if they reduce the cost to Town taxpayers;** ○ **Ensure prior and committed, substantial community fundraising, as a demonstration of community support and to reduce the projected capital and operating costs of the facility;** ○ **Develop financing models that cushion the impact on tax rates, and that distribute the capital costs equitably over the useful life of the facility; and** ○ **Design a facility that serves both a local and a regional market, in a fashion that complements and does not compete with other regional recreational facilities.** • Support and encourage improved Emergency Response Planning.
Tecumseh's Diversity and Inclusivity	• Encourage policies, programs and services that reflect the needs of existing residents and newcomers. • Celebrate the Town's diverse nature, landscape and neighbourhoods. • Encourage special events and community festivals to promote inclusivity.

Strategic Goal #4: Steward the Town's "continuous improvement" approach to municipal service delivery to residents and businesses

Priority Areas of Focus	Strategic Action Items
Improved Communication	• Reaffirm Council and Staff's commitment to a culture of transparency, openness and accessibility. • **Identify and comply with the new Ontario-wide statutory obligations for greater transparency in the conduct of municipal business across Ontario.** • Commit to constructive, two-way dialogue. • Promote transparency through improved communication with residents, 'leveraging' all existing and emerging communication tools, **including the Tecumseh Town "App", to achieve better communications across multiple platforms for a higher level of community engagement.** • **Update the website, to reduce stagnant or out-of-date material and encourage departments to conduct regular reviews of the information being made available to the public.** • **Share answers to standard questions during relevant periods via social media. For instance, questions about snow removal in anticipation of weather changes.**

Priority Areas of Focus	Strategic Action Items
Improved Communication (Continued)	• **Engage other partners, like businesses, organizations and other stakeholders in a more active fashion to promote fuller communication and targeted dialogue for community input and engagement.** • **Explore the community outreach potential of additional resources like the waste management calendar, the water bill insert, or the Parks and Recreation Guide, to include relevant information throughout the year.** • **Attend community events like the Night Markets and Corn Festival with a "booth" to share information and encourage dialogue from members of the public.**
Meaningful Opportunities for Participation	• Evaluate opportunities for enhanced participation in Town policy making, through such methods as individual and stakeholder consultations. • Inspire the citizens of Tecumseh to look ahead to a common prosperous and sustainable future. • Going beyond Council delegations: use new innovative methods and technological platforms to facilitate engagement.
Efficient Town Operations	• Undertake an asset management review, to update the Town's pioneering work in asset management planning. • **Develop and launch a formal Continuous Improvement Program, aimed at ensuring efficiency, rewarding innovation and productivity improvement, and allocating Town resources in line with the Town's priorities.** • Participate in inter-municipal benchmarking and sharing of innovation and best practices. • Ensure policy and budget choices support the maintenance of a competitive tax rate. • Facilitate appropriate service-utility levels and links with cost-of-services and program charges. • **Encourage members of Council to share the regular requests for service that they receive from constituents, via existing tools.** • **Start a regular question-and-answer program, available electronically, to share concerns of all residents broadly.**
Tecumseh's Customer Service	• Improve service delivery models to ensure satisfactory response times and service outcomes. • Commit to annual customer satisfaction survey and feedback mechanisms, including greater detail to support analysis and responsiveness. • **Review detailed comments within the recent Community Satisfaction Survey, to identify suggestions leading to improvements in decision-making, service-delivery and cost-containment.**

Strategic Goal #5: Demonstrate the Town of Tecumseh's leadership role in the community by promoting good governance and community engagement, by bringing together organizations serving the Town and the region to pursue common goals

Priority Areas of Focus	Strategic Action Items
Tecumseh's Culture of Collaboration	• Further enhance good Council/Staff relations, based on continuing support for Council/Manager form of municipal government. • **On a regular basis, share publicly the outcomes of community and stakeholder engagement activities, in part to demonstrate that the Town is listening.**
Voter Engagement in Tecumseh	• Promote community engagement. • Continue to promote voter participation through alternative voting methods.
Policy Coherence and Compliance	• Improve integration of key corporate decision-points and documents (Strategic Plan, Budget, Official Plan, project and departmental operating plans). • Improve opportunities for briefings, tracking of initiatives, use of dashboards and performance reporting.
Maintain "Team Tecumseh"	• Ensure Tecumseh is, and is perceived as, an employer of choice. • Take measures to attract, train, retain and ensure proper succession planning, in anticipation of high turn-over due to aging of work force.
Strategic Relationship Building	• Actively cultivate relationships with key stakeholders in order to maintain and build partnerships.
Effective Intergovernmental Relations	• Build opportunities for policy and funding partnerships with the Governments of Ontario and Canada. • Actively participate in Municipal Associations and municipal policy development. • Continue to be a good neighbour at the County and regional level.

TOWN OF
Tecumseh
ONTARIO · CANADA

THE CORPORATION OF THE
TOWN OF TECUMSEH

Chief Administrative Officer
Report No. 04/17

TO:	Mayor and Members of Council
FROM:	Shaun Fuerth, Acting Chief Administrative Officer
DATE OF REPORT:	March 6, 2017
DATE TO COUNCIL:	March 14, 2017
SUBJECT:	Ward Boundary & Council Structure Review Supplementary Report

RECOMMENDATIONS

It is recommended that:

1. The StrategyCorp Ward Boundary & Council Structure Supplementary Report [Supplementary Report] be received.

2. The Council Ward Structure Options, specifically options 3(b) and 3(c) as contained in the StrategyCorp Supplementary Report be considered by Council and that a final preference be determined by Council.

3. That a by-law to adopt the preferred option be prepared for consideration at the March 28, 2017 meeting of Council.

BACKGROUND

At Council's Special Meeting on January 24, 2017, Council considered the Ward Boundary & Council Structure Final Report from StrategyCorp. Several options were identified for consideration, and Council passed the following resolution (SCM-02/17):

> **THAT** the January 2017 Final Report on the Ward Boundary and Council Structure Review, as prepared by StrategyCorp., be received; and
> **THAT** Option 3B of the January 2017 Final Report on the Ward Boundary and Council Structure Review be accepted for the 2018 Municipal Election.

As part of the Council's direction, Mr. John Matheson of StrategyCorp has provided more information in a Supplementary Report related to:

- The effect of moving from 2031 to 2026 as the period for assessing "effective representation;" and
- The creation of a new Option 3(c), which makes "minor tweaks" to the boundaries proposed in Option 3(b).

In the Supplementary Report there is no change in direction, just clarification on the following issues:

- Options 3(b) and 3(c) are both acceptable to use and in either scenario as they are better than the status quo.

- In both options the +/- 25% population range may be out of proportion, but that is inevitable given the collision between historic settlement patterns, and the localized growth the Town is forecasting. This is an acceptable starting point when identifying this is part of a phasing process. (review after 10 years)

- The new 3(c) option is not mathematically as good as option 3(b), but it is adequate to not offend the test, especially with the shorter (2026) term. This option also, in essence, creates a "purer" rural ward, which Council had identified has an important aspect of any option.

- The boundary modification in 3(c) between Wards 1,2 and 3 are reflective of comments received from Council and could be adjusted in many ways, but the boundaries in both and 3(b) and 3(c) are both sensible, defensible, and well-motivated.

COMMENTS

The attached Supplementary Report is submitted to Council in response to discussion and inquiries at the January 24, 2017 Special Council Meeting where the Final Report was received and option 3(b) was accepted.

In addition, Administration will prepare two further reports on matters arising from the Final Report. The first will address Voting Methods, taking into consideration StrategyCorp's findings from the review and public consultation. The second will address the implementation of the Ward Boundary and Council Structure option that is finally decided upon by Council.

CONSULTATIONS

Corporate Services & Clerk
Planning & Building Services
Council Members
Community Stakeholders & Residents

FINANCIAL IMPLICATIONS

Depending on the option selected by Council to move forward, any related financial implications will be determined and included in a future report to Council on the 2018 Municipal Election.

LINK TO STRATEGIC PRIORITIES

No.	2015-16 Strategic Priorities	Applicable
1.	Make the Town of Tecumseh an even better place to live, work and invest through a shared vision for our residents and newcomers.	✓
2.	Ensure that the Town of Tecumseh's current and future growth is built upon the principles of sustainability and strategic decision-making.	✓
3.	Integrate the principles of health and wellness into all of the Town of Tecumseh's plans and priorities.	✓
4.	Steward the Town's "continuous improvement" approach to municipal service delivery to residents and businesses.	✓
5.	Demonstrate the Town's leadership role in the community by promoting good governance and community engagement, by bringing together organizations serving the Town and the region to pursue common goals.	✓

COMMUNICATIONS

Not applicable ☐

Website ☒ Social Media ☒ News Release ☒ Local Newspaper ☒

This report has been reviewed by senior Administration as indicated below and recommended for submission by the CAO.

Prepared by:

_____
Shaun Fuerth, B.C.S.
Acting Chief Administrative Officer

Reviewed by:

_____
Laura Moy,
Director, Corporate Services & Clerk

Reviewed by:

_____
Brian Hillman
Director, Planning & Building Services

Recommended by:

_____
Tony Haddad, MSA, CMO, CPFA
Chief Administrative Officer

Attachment(s): 1. StrategyCorp, Town of Tecumseh Ward and Council Structure Review Supplementary Report, March 5, 2017

SF/ep

Mr. Tony Haddad
Chief Administrative Officer
Town of Tecumseh
917 Lesperance Rd.
Tecumseh, ON N8N 1W9

Dear Mr. Haddad

RE: Ward Boundary Review – Supplementary Report

The purpose of this letter is to provide you with responses to the comments that were made at the presentation of our Final Report.

As per your direction, we have considered:

- The effect of moving from 2031 to 2026 as the period for assessing "effective representation;" and
- The creation of a new Option 3(c), which makes "minor tweaks" to the boundaries proposed in Option 3(b).

Given Tecumseh's unique geography, historical settlement, and forecasted settlement patterns, it would appear that no solution based on wards will ever be "perfect," both now and in 10 years and 15 years, in terms of achieving both:

- Perfectly equal distribution of population, and
- Perfect representation of actual and historic communities of interest.

In our view, however, both options 3(b) and 3(c) would offer improvements over the status quo, and provide appropriate ward boundaries for the Town of Tecumseh that would meet the test of "effective representation" between now and 2026.

Yours truly,

John Matheson
Principal

100 RUE QUEEN STREET, SUITE 550
OTTAWA, ONTARIO K1P 1J9
613-231-2630

145 KING STREET EAST, 2ND FLOOR
TORONTO, ONTARIO M5C 2Y7
416-864-7112

CREATING CONDITIONS FOR SUCCESS

Supplementary Report

Background

In June 2016, the Town of Tecumseh retained StrategyCorp to conduct a Ward Boundary and Council Structure Review (the "Review"). In January 2017, we presented a Final Report, at which time we received comments which were expressed as proposed "minor improvements" to Option 3B.

Comments received at the Council Meeting can be grouped under two headings:

- Reconsidering the period for assessing "effective representation" from the present to 2031 to the present to 2026.
- Reconsidering the boundaries in Option 2(b).

In this Report, we address both of these issues.

Reconsidering the Planning Horizon from 2031 to 2026

The terms of reference directed us to consider the suitability of wards up to 2031. Over that period of time, Tecumseh is projected to grow by approximately 7,000 residents. About 60% of that growth is forecast to occur between 2014 and 2026. The remaining ~40% is forecast to occur between 2026 and 2031.

A chart showing the forecast growth applied to the ward boundaries in Option 3(c) is shown below:

Distribution of Forecast Growth by New Wards contemplated by 3(c)						
	Total Forecast	New Ward 1	New Ward 2	New Ward 3	New Ward 4	New Ward 5
2014	23135	5280	6306	4881	3068	3600
2026	27155	5362	6802	5343	5985	3663
2031	30135	5362	6802	5343	8754	3874

As the above chart shows (see especially the yellow highlight), the vast majority of the growth between 2026 and 2031 is localized in New Ward 4. As a result of this uneven growth, it is very difficult to set ward boundaries that would satisfy the "representation by population" aspect of the "effective representation" test over the period from now to 2031.

In the population projection charts which follow at page 8, we have added new columns to show the relative populations of wards based on 2014 numbers, as well as 2026 and 2031 projections. We conclude that shortening the time horizon for assessing scenarios from 2031 to 2026 is helpful to meeting the "effective representation test.

Option 3(c): "Tweaking" the Boundaries of Option 3(b)

When we presented our Final Report, the ward boundary options presented in Option 3(b) were generally well received. We were asked, however, to report back on "tweaks" that would:

- **Better respect what was described to us as the "functional boundaries" and "actual communities of interest" of neighborhoods:** Specifically we were asked to consider dividing wards along "backyard" boundaries in certain cases, rather than through the middle of streets.
    - Shift the boundary between Wards 3 and 2 to the west. The resulting boundary streets would be Revland Drive and Tecumseh Road); and,
    - Shift the boundary between Wards 1 and 3 that is west of Lesperance to the north so that both sides of St. Thomas Crescent are included in Ward 3.
- **Better respect the rural character of the most southerly ward:** Specifically, we were asked to develop an option that would re-draw the boundary of new ward five along the south side of the railway line.[1]

Below are two maps showing Option 3(c). Each shows:

- The revised ward boundaries
- The current population (in black)
- The additional population that is projected (in red):
    - For 2026 (Map 1), and
    - For 2031 (Map 2).

[1] This has a relatively limited effect in the near term, but in the later years of the forecast it reduces the population of new Ward 5 significantly. By 2026, new Ward 5 does not have enough population. By 2031, new Ward 5 will still be underpopulated, but new Ward 4 will also be overpopulated, relative to Option 3(b).

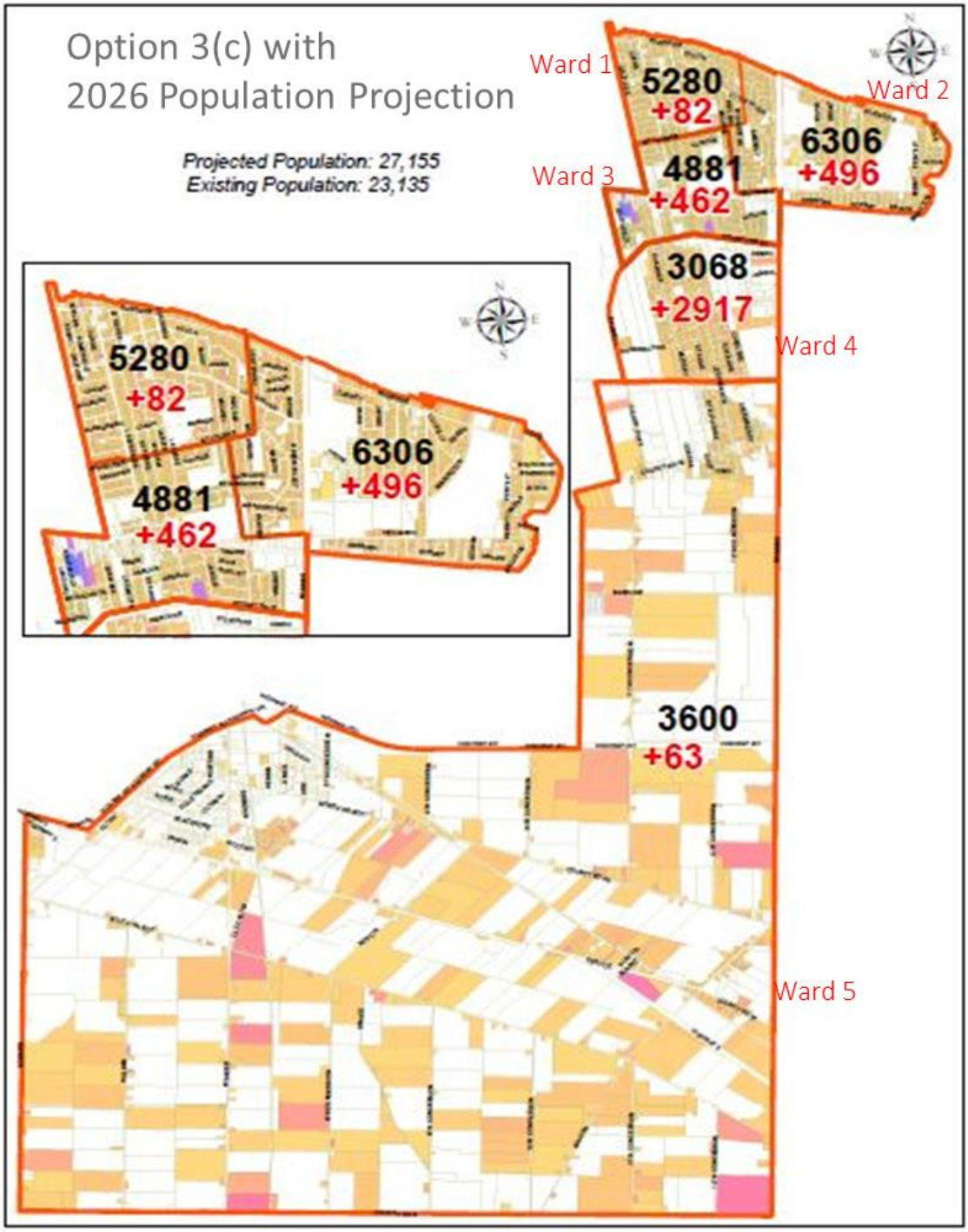
Option 3(c) with
2026 Population Projection
Projected Population: 27,155
Existing Population: 23,135
Ward 1
5280
+82
Ward 2
6306
+496
Ward 3
4881
+462
3068
+2917
Ward 4
5280
+82
6306
+496
4881
+462
3600
+63
Ward 5

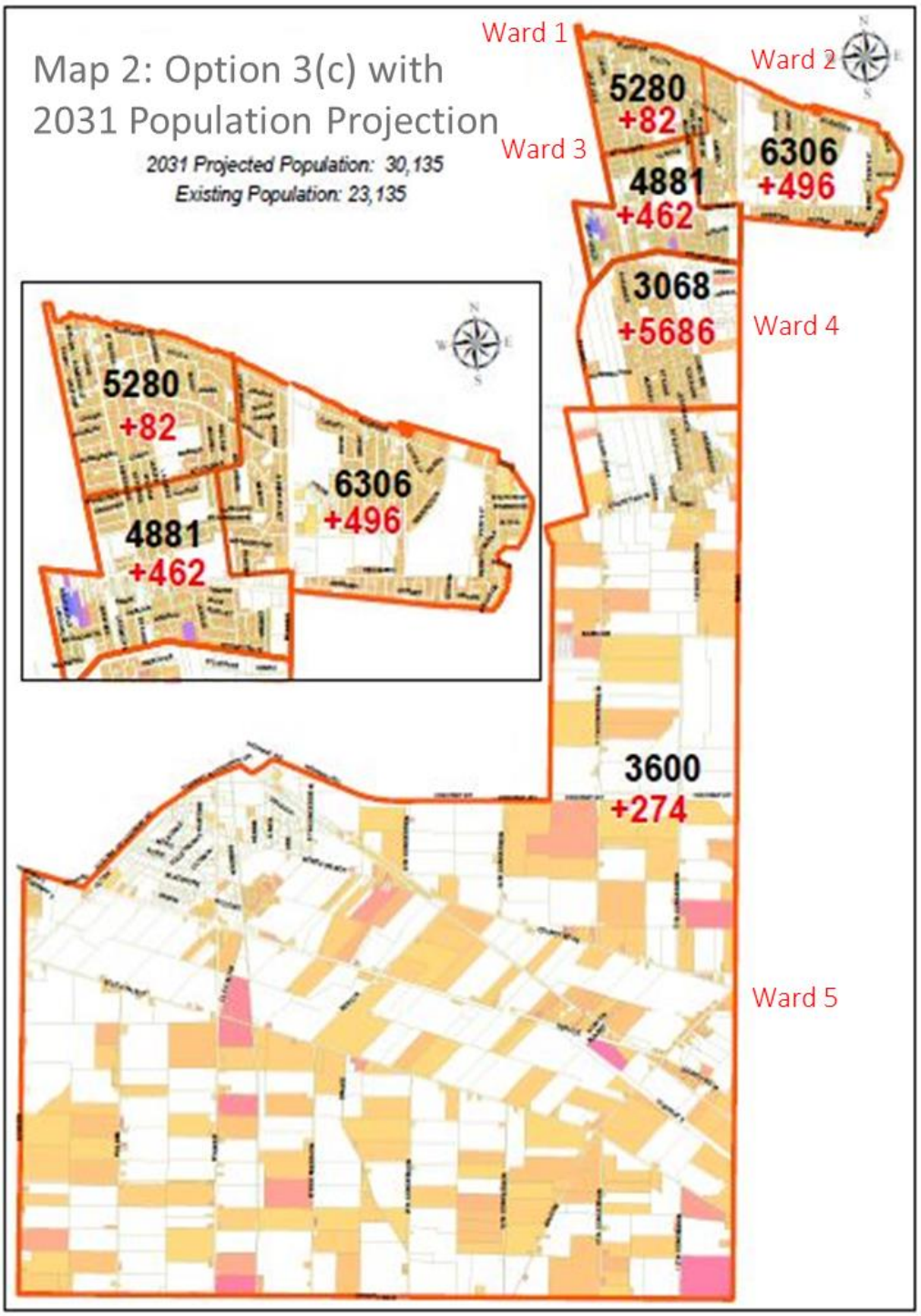
Map 2: Option 3(c) with
2031 Population Projection
2031 Projected Population: 30,135
Existing Population: 23,135
Ward 1
Ward 2
Ward 3
Ward 4
Ward 5
5280
+82
6306
+496
4881
+462
3068
+5686
3600
+274

Applying the Evaluative Criteria to Option 3(c)

Option 3C: "OPTION 3B with minor adjustments"	
Council Size	7 (Mayor, Deputy Mayor, 5 Councillors)
Method of Election	Wards
Number of Councillors	5
Number of Wards	5

- Significant improvement over status quo from a representation by population perspective.
- Ward 2 will be underrepresented (+36%) at first, but will fall steadily into norm as growth occurs
- Ward 4 will be overrepresented at first (-34%), but by 2026 it would come into the norm.
- By 2026, Ward 5 will be overrepresented.
- By 2031, representation issues will increase as ward 4 continues to grow, while ward five does not gain in population (-36 vs. +45 in 2031).

Ward	Councillors	2014 Pop'n	2014 Residents per Councillor	2014 Variance from Average	2026 Pop'n	2026 Residents per Councillor	2026 Variance from Average	2031 Pop'n	2031 Residents per Councillor	2031 Variance from Average
1	1	5,280	5,280	+14%	5,362	5,362	-1%	5,362	5,362	-11%
2	1	6,306	6,306	+36%	6,802	6,802	+25%	6,802	6,802	+13%
3	1	4,881	4,881	+5%	5,343	5,343	-2%	5,343	5,343	-11%
4	1	3,068	3,068	-34%	5,985	5,985	+10%	8,754	8,754	+45%
5	1	3,600	3,600	-22%	3,663	3,663	-33%	3,874	3,874	-36%
Total	5	23,135	4,627 (average)	N/A	27,155	5,431 (average)	N/A	30,135	6,027 (average)	N/A

In our consultation, Council and stakeholders clearly indicated the importance of having regard to:

- appropriate rural representation.
- the significant amount of casework and the increased burden on the councillor in current ward 4 that come from the presence of industrial properties.
- the benefits of achieving one councillor per ward.

OPTION 3C: Meets Test of Effective Representation in 2026? YES	
Key factors	**Analysis**
1. Representation by Population (+/-25%)	• 2014: two of the five wards would be outside the +/-25%, but this situation would improve with projected growth. • By 2026, only ward 5 would be outside the +/- 25% • By 2031, it is likely that further revisions will be required
2. Communities of Interest	• Specific historical Pre-amalgamation boundaries are largely redrawn, but actual communities of interest are respected
3. Geography	• Improves ward 5 by keeping it on the south side of the railway tracks • May improve wards 1,2 and 3 (compared to option 3b)
4. Quality of Representation	• One councillor per ward ratio may foster more direct relationship with residents/remove potential for issues • The rural ward maintains its rural character • Tweaks improve representation by better linking actual communities • No change in councillor costs

Are the greater than +/-25% population ratios permissible?

As we discussed in our Final Report, representation by population is an important element, but only one element of the test for "effective representation." The goal of +/- 25% is not a hard and fast and Councils are understood to have the discretion to deviate from it in order to demonstrably advance other legitimate elements of effective representation test.[2] In this case, in our opinion flexibility is also warranted by a variety of factors, including the challenge of accommodating uneven historic and future forecast growth patterns to provide stable ward boundaries over time.

Comparing the Options

The following options are compared in the table below:

- Option 1: Status Quo
- Option 3(b)
- Option 3(c)

[2] See our Final Report for a full elaboration of this. Some of the other elements of the test include communities of interest, geography, quality of representation.

STATUS QUO

Ward	Councillors	2014 Pop'n	2014 Residents per Councillor	2014 Variance from Average	2026 Pop'n	2026 Residents per Councillor	2026 Variance from Average	2031 Pop'n	2031 Residents per Councillor	2031 Variance from Average
1	2	12,836	6,418	+39%	13,405	6,703	+23%	13,405	2	+11%
2	1	3,629	3,629	-22%	4,101	4,101	-25%	4,101	1	-32%
3	1	4,049	4,049	-12%	7,026	7,026	+29%	10,003	1	+66%
4	1	2,620	2,620	-43%	2,623	2,623	-52%	2,626	1	-56%
Total	5	23,135	4,627 (average)	N/A	27,155	5,431 (average)	N/A	30,135	6,027 (average)	N/A

OPTION 3B

Ward	Councillors	2014 Pop'n	2014 Residents per Councillor	2014 Variance from Average	2026 Pop'n	2026 Residents per Councillor	2026 Variance from Average	2031 Pop'n	2031 Residents per Councillor	2031 Variance from Average
1	1	5,344	5,344	+15%	5,426	5,426	0%	5,426	5,426	-10%
2	1	5,165	5,165	+12%	5,658	5,658	4%	5,658	5,658	-6%
3	1	5,958	5,958	+29%	6,423	6,423	18%	6,423	6,423	+7%
4	1	2,590	2,590	-44%	5,507	5,507	1%	7,265	7,265	+21%
5	1	4,078	4,078	-12%	4,141	4,141	-24%	5,363	5,363	-11%
Total	5	23,135	4,627 (average)	N/A	27,155	5,431 (average)	N/A	30,135	6,027 (average)	N/A

NEW: OPTION 3C REVISED "revised as per comments received at Council"

Ward	Councillors	2014 Pop'n	2014 Residents per Councillor	2014 Variance from Average	2026 Pop'n	2026 Residents per Councillor	2026 Variance from Average	2031 Pop'n	2031 Residents per Councillor	2031 Variance from Average
1	1	5,280	5,280	+14%	5,362	5,362	-1%	5,362	5,362	-11%
2	1	6,306	6,306	+36%	6,802	6,802	+25%	6,802	6,802	+13%
3	1	4,881	4,881	+5%	5,343	5,343	-2%	5,343	5,343	-11%
4	1	3,068	3,068	-34%	5,985	5,985	+10%	8,754	8,754	+45%
5	1	3,600	3,600	-22%	3,663	3,663	-33%	3,874	3,874	-36%
Total	5	23,135	4,627 (average)	N/A	27,155	5,431 (average)	N/A	30,135	6,027 (average)	N/A

Observations: Comparing Options 3(b) and 3(c) to each other, and to the Status Quo:

1. **Each of the options has wards that do not fall inside the representation by population target of +/-25% on the current population numbers.**[3]
   - The status quo starts out with two of four wards not meeting the representation target, and gets worse over the life of the population forecasts.
   - Option 3(b) start outs with 3 of 5 wards inside the band of +/-25 percent. By 2026, all wards meet the test.
   - Option 3(c) also starts out with 3 of 5 wards outside of the +/-25% band. By 2026, Option 3(c) will have four wards inside the +/-25% target. New Ward 5 will still fall outside the band.
2. **Option 3(b): Notwithstanding its challenges, in our January Report, we concluded that Option 3(b) was the best of the then available options, having regard to the principles of effective representation and the opinions of stakeholders and the community.**
   - "It strikes the right balance between accommodating Tecumseh's expected population growth and ensuring rural representation on council."
   - "It also achieves one councillor per ward and creates ward boundaries that respect existing neighbourhoods, if not the actual historic boundaries of the pre-amalgamation."
   - On the population growth forecasts, Option 3(b) will meet the +/-25% target in 2026 and 2031 and will therefore deliver better "representation by population" than option 3(c).
3. **Option 3(c): In our opinion, Option 3(c) also meets the test of "effective representation."**
   - In our view, the proposed boundary tweaks relating to wards 1, 2 and 3 are appropriate, in that they appear to properly respect actual communities of interest. The use of the railway line as the boundary between new Wards 4 and 5 would appear to better preserve the rural character of new Ward 5 than the boundary proposed in Option 3(b).
   - Overall, Option 3(c) does not offer as strong a correlation with meeting the +/- 25% test as Option 3(b). Nevertheless, 3(c) is clearly a legitimate option.
   - The forecast "bulge" of growth in new Ward 4 will mean that Option 3(c) would need to be reviewed before 2031, when Option 3(b) would still be forecast to meet the test.

[3] Each of these conclusions is contingent on forward looking assumptions about growth. For this reason, both current and future projections need to be weighed against the prospect that assumptions may fall above or below forecasts.

4. **We conclude that both option 3(b) and 3(c) are superior to the status quo:**
   - Both come closer to respecting the representation by population target of +/-25% than the status quo.
   - Both achieve 1 councillor per ward.
   - Both continue to provide for strong rural representation in the new Ward 5.
   - Both respect the actual communities of interest of residents.
5. **To the extent that options 3(b) and 3(c) have boundaries that depart from the representation by population targets, the policy rationale for the departures relates to stated goals of:**
   - Managing the challenges of uneven historic and future forecast growth patterns to provide for stable ward boundaries over time.
   - Preservation of existing communities
   - Encouragement of rural representation.
6. **Options 3(b) and 3(c) would appear to be legitimate choices for the Town of Tecumseh, which would both meet the test of effective representation.**

Main Measurable Points of Comparison: Status Quo, Option 3(b) and 3(c)

	Status Quo	Option 3(b)	Option3(c)
How many wards currently meet the +/-25% target?	2/4 🟢🟢🔴🔴	3/5 🟢🟢🟢🔴🔴	3/5 🟢🟢🟢🔴🔴
How many wards meet the +/-25% target in 2026?	2/4 🟢🟢🔴🔴	5/5 🟢🟢🟢🟢🟢	4/5 🟢🟢🟢🟢🔴
How many wards meet the +/-25% target in 2031?	1/4 🟢🔴🔴🔴	5/5 🟢🟢🟢🟢🟢	3/5 🟢🟢🟢🔴🔴
Preserve Rural Representation	✓	✓	✓
Achieve 1 councillor per ward	X	✓	✓

Option 1: The Status Quo	
Council Size	7 (Mayor, Deputy Mayor, 5 Councillors)
Method of Election	Wards
Number of Councillors	5
Number of Wards	4

Analysis

- From a representation by population perspective, the current ward structure is problematic and getting worse: Wards 1 and 4 are significantly beyond the +/-25% range. By 2031, three of four wards will be outside the +/-25% range.

Ward	Councillors	2014 Pop'n	2014 Residents per Councillor	2014 Variance from Average	2026 Pop'n	2026 Residents per Councillor	2026 Variance from Average	2031 Pop'n	2031 Residents per Councillor	2031 Variance from Average
1	2	12,836	6,418	+39%	13,405	6,703	+23%	13,405	2	+11%
2	1	3,629	3,629	-22%	4,101	4,101	-25%	4,101	1	-32%
3	1	4,049	4,049	-12%	7,026	7,026	+29%	10,003	1	+66%
4	1	2,620	2,620	-43%	2,623	2,623	-52%	2,626	1	-56%
Total	5	23,134	4,627 (average)	N/A	27,155	5,431 (average)	N/A	30,135	6,027 (average)	N/A

- The significant growth anticipated in current Ward 3 presents the biggest long term challenge to the existing ward boundaries.
- The status quo provides distinct representation for Tecumseh's pre-amalgamation municipalities and the rural community.
- A majority of survey respondents favoured a seven member council.

OPTION 1: Meets Test of Effective Representation? NO	
Key factors	**Analysis**
1. Representation by Population	• Three of four wards will be significantly outside the +/-25% range by 2031
2. Communities of Interest	• Respects pre-amalgamation boundaries • Provides a rural voice (Ward 4)
3. Geography	• No significant issues identified
4. Quality of Representation	• No change in councillor costs or access

Option 1: The Status Quo

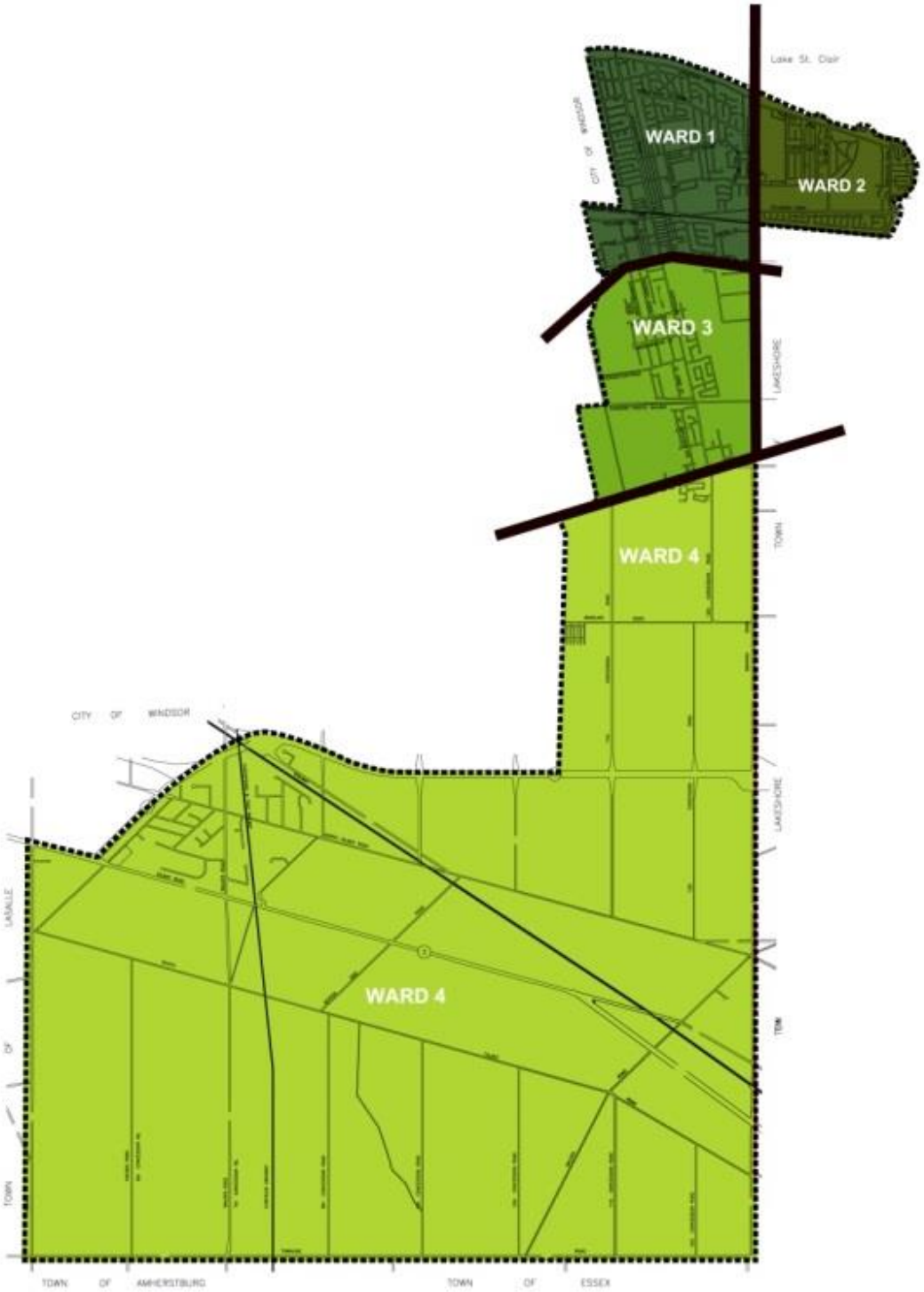

Option 3B: Five Ward Structure, Major Boundary Adjustments	
Council Size	7 (Mayor, Deputy Mayor, 5 Councillors)
Method of Election	Wards
Number of Councillors	5
Number of Wards	5

Analysis

Significant improvement from a representation by population perspective. Wards 3 and 4 fall outside the +/-25% range in the short term but all wards achieve balance by 2031.

Ward	Councillors	2014 Pop'n	2014 Residents per Councillor	2014 Variance from Average	2026 Pop'n	2026 Residents per Councillor	2026 Variance from Average	2031 Pop'n	2031 Residents per Councillor	2031 Variance from Average
1	1	5,344	5,344	+15%	5,426	5,426	0%	5,426	5,426	-10%
2	1	5,165	5,165	+12%	5,658	5,658	4%	5,658	5,658	-6%
3	1	5,958	5,958	+29%	6,423	6,423	18%	6,423	6,423	+7%
4	1	2,590	2,590	-44%	5,507	5,507	1%	7,265	7,265	+21%
5	1	4,078	4,078	-12%	4,141	4,141	-24%	5,363	5,363	-11%
Total	5	23,135	4,627 (average)	N/A	27,155	5,431 (average)	N/A	30,135	6,027 (average)	N/A

- Ward boundary adjustments balance pre-amalgamation communities and population balance.
- Single member representation in all wards may foster more direct relationship with residents.
- Easier to understand division of Wards 1-3 (for voters).
- Adjustment to the boundary between Wards 3 and 4 helps achieve a better population balance.
- Over time, it may dilute the distinct rural nature of Ward 4.

OPTION 3B: Meets Test of Effective Representation? YES	
Key factors	**Analysis**
1. Representation by Population	• All four wards inside the +/-25% range by 2031 • Wards 3 and 4 significantly outside of range in short term
2. Communities of Interest	• Pre-amalgamation boundaries are largely erased • May provide additional opportunity for rural representation (Wards 4 and 5)
3. Geography	• No significant issues identified
4. Quality of Representation	• No change in councillor costs • One councillor per ward ratio may foster more direct relationship with residents

Option 3B: Five Ward Structure - Major Boundary Adjustments

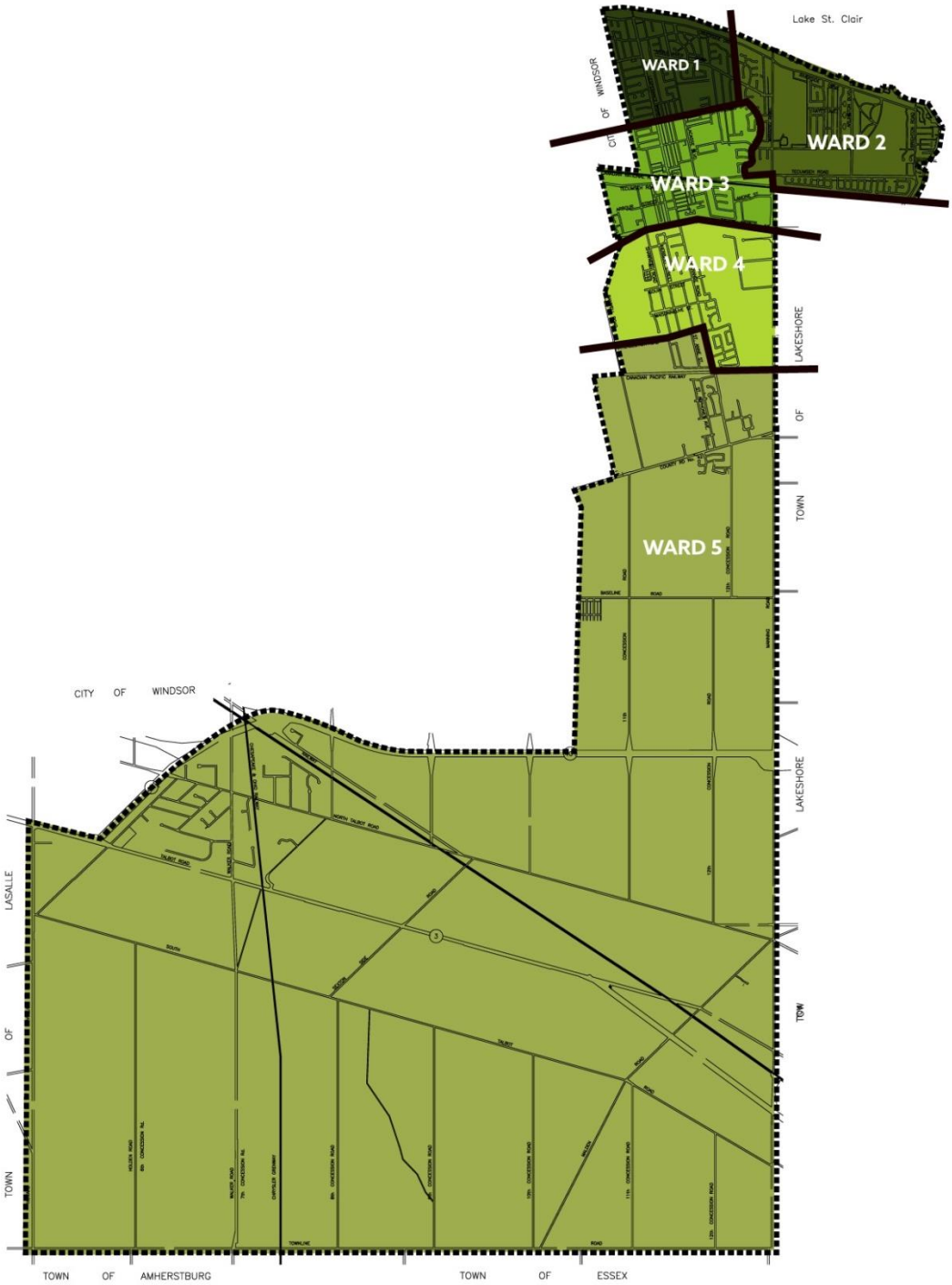

Appendix "B"
Council and Ward Structure Options
From Final Report, updated to include new Option 3(c)

Concept	Council Size	Council Composition	Election method	Wards	How We Get There	Meets Effective Representation
1 - Status Quo	7	Mayor Deputy Mayor 5 Councillors	Wards	4	No change/status quo	No
2 - Minor Ward Boundary Adjustments, Same Council Size	7			4	Adjust ward boundaries between: • Wards 1 and 3; and • Wards 3 and 4	Yes
3 - Five Ward Structure, Same Council Size	7			5	Increase wards by dividing Ward 1 into two separate wards Adjust boundaries between Wards 1, 2 and 3	Yes
3A – Five Ward Structure, Major Boundary Adjustments	7			5	Substantially adjust all existing ward boundaries	Yes
3B – Five Ward Structure, Major Boundary Adjustments	7			5	Substantially adjust all existing ward boundaries	Yes
NEW 3C – Five Ward Structure, Major Boundary Adjustments	7			5	Substantially adjust all existing ward boundaries	Yes
4 - Two Ward Structure, Same Council Size	7			2	Adjust the boundary between Wards 1 and 3, then merge: • Wards 1 and 2; and • Wards 3 and 4	Yes
5 - At-large, Same Council Size	7		At-large	None	Elect all Councillors at-large	Yes
6 - Major Boundary Adjustments, Smaller Council Size	6	Mayor Deputy Mayor 4 Councillors	Wards	4	Significant boundary adjustments between all wards Reduce by one Council position	No
7 - At-large, Smaller Council Size	6		At-large	None	Elect all Councillors at-large Reduce by one Council position	Yes
8 - Two Ward Structure, Minimum Council Size	5	Mayor Deputy Mayor 3 Councillors	Wards	2	Adjust the boundary between Wards 1 and 3, then merge: • Wards 1 and 2; and • Wards 3 and 4 Reduce by one Council position	Yes
9 - Major Boundary Adjustments, Minimum Council Size	5	Mayor 4 Councillors	Wards	4	Significant boundary adjustments between all wards Reduce by one Council position and remove Deputy Mayor position	No
10 - At-large, Minimum Council Size	5	Mayor Deputy Mayor 3 Councillors	At-large	None	Elect all Councillors at-large Reduce by two Council positions	Yes
11 - No Boundary Adjustments, Larger Council Size	8	Mayor 7 Councillors	Wards	4	Add a third Council position to Ward 1 and a second Council position to Ward 3 Remove Deputy Mayor position	Yes

THE CORPORATION OF THE
TOWN OF TECUMSEH

Fire & Emergency Services
Report No. 04/17

TO:	Mayor and Members of Council
FROM:	Doug Pitre, Director of Fire Services & Fire Chief
DATE OF REPORT:	March 3, 2017
DATE TO COUNCIL:	March 14, 2017
SUBJECT:	Ultimate Fun Firefighter Challenge Station 2 – May 13, 2017

RECOMMENDATIONS

It is recommended that:

1. The Ultimate Fun Firefighter Challenge Station 2 information presented in the Fire & Emergency Services Department Report No. 04/17, be received.

2. The Training Tower rental fee be waived for the Ultimate Fun Firefighter Challenge that will take place at Station 2 on Saturday May 13, 2017.

BACKGROUND

A Firefighter Challenge is a firefighter event geared to promote physical fitness in a friendly competitive environment. It is a competition based on fire fighting tasks commonly performed in emergency situations with many different levels of competitors from seasoned veterans to first time rookies. Competitors are encouraged to bring their family and friends to enjoy a fun filled day.

The Tecumseh Ultimate Fun Firefighter Challenge Team competes throughout Canada under the *Firefit of Canada* circuit and in the United States under the *On Target Firefighter Combat Challenge*. Firefighters Basem Baalbaki and Dan Redmond have participated in the 'World's' competition in Las Vegas in 2013 and were inducted into the 'Lion's Den' Hall of Fame. This level of competitiveness is in part due to the exceptional training facilities at Tecumseh Fire Station 2, in particular the Training Tower. This Tower, which was primarily funded through donations makes available a facility that provides a unique training opportunity.

In May of 2014, Tecumseh was able to successfully host a similar Firefighter Challenge event so that area Firefighters could experience challenges on par with those presented in both the Firefit and On Target circuits. This event experienced an excellent turnout with area Volunteer Firefighters from as far away as Chatham. For many of the participants, it was their first Firefighter Challenge experience. The success of this event provided funds for the Team to continue representing Tecumseh Fire Rescue in future Challenge Events in both Canada and the United States. The 2014 event also provided a unique experience to showcase the Fire Department's exceptional facilities to area Firefighters and St. Clair College students as well as the public.

COMMENTS

The 2017 Ultimate Fun Firefighter Challenge Event will:

- Introduce volunteer and full-time fire departments from both the local area and the broader geographical area to the rigors of the Firefighter Challenge
- Promote wellbeing and physical fitness to participants
- Highlight Tecumseh's Station 2 facilities for the purpose of training and testing possibly generating interest amongst other departments for rentals
- Continued cooperation between area Fire Departments
- Provide assistance to a local charity

The day's activities and competition on May 13, 2017 will be headed by Firefighter Dan Redmond and Firefighter Basem Baalbaki and a group of volunteers. The members of the Tecumseh Ultimate Fun Firefighter Challenge Team, Firefighter Dan Redmond and Firefighter Basem Baalbaki request permission to use Fire Station #2, facilities, grounds and Training Tower to conduct this daylong Firefighter Challenge competition. Refer to attached letter of request and letter of understanding.

The Ultimate Fun Firefighter Challenge Team will be required to complete a Facility Use Agreement and provide a Certificate of Insurance naming the Town of Tecumseh as an additional named insured on a policy of insurance of not less than $2M, in keeping with the Town and Department practice for use of facilities and equipment.

CONSULTATIONS

Corporate Services & Clerk

FINANCIAL IMPLICATIONS

A portion of the funds raised by registration will be set aside for the Tecumseh Ultimate Fun Firefighter Challenge Team's attendance at future events.

The fee for use of the Tower is currently $325.75. It is recommended that the fee be waived for this event.

LINK TO STRATEGIC PRIORITIES

No.	2015-16 Strategic Priorities	Applicable
1.	Make the Town of Tecumseh an even better place to live, work and invest through a shared vision for our residents and newcomers.	✓
2.	Ensure that the Town of Tecumseh's current and future growth is built upon the principles of sustainability and strategic decision-making.	✓
3.	Integrate the principles of health and wellness into all of the Town of Tecumseh's plans and priorities.	✓
4.	Steward the Town's "continuous improvement" approach to municipal service delivery to residents and businesses.	✓
5.	Demonstrate the Town's leadership role in the community by promoting good governance and community engagement, by bringing together organizations serving the Town and the region to pursue common goals.	✓

COMMUNICATIONS

Not applicable ☒

Website ☐ Social Media ☐ News Release ☐ Local Newspaper ☐

This report has been reviewed by senior Administration as indicated below and recommended for submission by the CAO.

Prepared by:

_____
Doug Pitre
Director of Fire Services & Fire Chief

Recommended by:

_____
Tony Haddad, MSA, CMO, CPFA
Chief Administrative Officer

Attachment(s):
1. Letter of Request for 2017 Ultimate Fun Firefighter Challenge Event
2. Participant Waiver and Release Form

DP:kp

THE CORPORATION OF THE
TOWN OF TECUMSEH

Public Works & Environmental Services
Report No. 17/17

TO:	Mayor and Members of Council
FROM:	Sam Paglia, P.Eng., Drainage Superintendent
DATE OF REPORT:	March 3, 2017
DATE TO COUNCIL:	March 14, 2017
SUBJECT:	West Branch Delisle Drain – Tender Award

RECOMMENDATIONS

It is recommended:

1. That the tender for the West Branch Delisle Drain improvements in the amount of $120,655 excluding HST, be awarded to Murray Mills Excavating & Trucking (Sarnia) Ltd. and that the Mayor and Clerk be authorized to execute an agreement, satisfactory in form to the Town's Solicitor, with Murray Mills Excavating & Trucking (Sarnia) Ltd. once all of the approvals for the project have been obtained.

BACKGROUND

The Town received a Request for Repair and Improvement of the West Branch Delisle Drain on December 11, 2013 in accordance with Section 78 of the *Drainage Act*. The Town subsequently appointed Rood Engineering Inc., under Public Works & Environmental Services Report No. 06/14 on January 14, 2014 (Motion: RCM-14/14). A drainage report was prepared and submitted by the appointed Engineer and provisionally adopted by Council as By-law No. 2016-49 on June 28, 2016. The drainage report was the subject of an appeal to the Tribunal heard on November 21, 2016. The drainage report with revisions directed by Tribunal was given third and final readings on February 28, 2017.

COMMENTS

On February 13, 2017, the tender was advertised and made available at the municipal offices of the Town of Tecumseh, and posted on the Town's website. A copy was also provided to the Windsor Construction Association. Three tenders were received on Thursday, March 2, 2017. The tenders were opened publicly in Council Chambers and in the presence of the Purchasing Coordinator and Administration.

Rood Engineering Inc. has reviewed the tender submissions and provided a report to the Town on March 3, 2017, which is appended as Attachment No. 1 of this report.

The tender results are summarized as follows:

Tenderer	Tender Price (excl. HST)
Murray Mills Excavating & Trucking (Sarnia)	$120,655.00
Nevan Construction Inc.	$146,900.00
H.E. Construction Inc.	$217,673.35

The tender packages were noted at the opening on March 2, 2017 and all packages were submitted on time and with the required documentation attached. All tender submissions were reviewed and found to be generally complete and accurate. Murray Mills Excavating & Trucking (Sarnia) is the low bidder. Correspondence with the contractor regarding the submitted price was confirmed by the Consultant and the contractor is prepared to proceed with this project in accordance with the tendered submission.

Approvals

Essex Regional Conservation Authority (ERCA)
Comments were received on February 27, 2017 from ERCA, and an ERCA permit for the works as set out in the report has been received.

Recommendation

Administration therefore recommends that the tender for the West Branch Delisle Drain improvements in the amount of $120,655 excluding HST, be awarded to Murray Mills Excavating & Trucking (Sarnia) Ltd. and that the Mayor and Clerk be authorized to execute an agreement, satisfactory in form to the Town's Solicitor, with Murray Mills Excavating & Trucking (Sarnia) Ltd. once all of the approvals for the project have been obtained.

CONSULTATIONS

Rood Engineering Inc.
Director Financial Services & Treasurer
Director Corporate Services & Clerk
Procurement Officer

FINANCIAL IMPLICATIONS

The lowest tender received of $120,655 was approximately 110% above the Engineer's Report Estimate of $110,000.

As a result of the marketplace tenders received for this project, Council is not required to hold a meeting in the manner prescribed by Section 59(1) of the *Drainage Act*, as the tendered costs do not exceed the engineer's estimate by 133%.

Detailed assessments will be determined by the engineer once the project has concluded. Any decreases or increases in project costs are specific to the amounts received in the tender items and may or may not affect all landowners.

	Engineer's Estimates and the Lowest Tendered Price for the West Branch Delisle Drain		
	Description	**Estimate**	**Tendered**
	Construction	$ 111,936	$ 120,655
	Incidentals	$ 58,098	$ 58,098
	Allowances/Compensation	$ 6,816	$ 6,816
	ERCA	$ 150	$ 150
	Total estimated cost	**$ 177,000**	**$ 185,719**
	HST – non recoverable (1.76%)		$ 3,269
	Total		**$ 188,988**
	Estimated Assessment Summary		
	Town of Tecumseh (Road Authority)	$ 7,852	$ 8,384
	County of Essex (Road Authority)	$ 2,207	$ 2,356
	Ministry of Transportation (Roads)	$ 11,637	$ 12,425
	Non-Agricultural	$ 12,218	$ 13,045
	Non Pro-ratable Section 26 assessments		
	Town of Tecumseh (Road Authority)	$ 7,562	$ 8,074
	County of Essex (Road Authority)	$ 9,270	$ 9,898
	Ministry of Transportation (HWY #3)	$ 7,625	$ 8,141
	Non-Agricultural	$ 11,128	$ 11,882
**	Privately owned Agricultural (grantable)	$ 71,809	$ 76,672
*	Provincial Grants	$ 35,369	$ 37,764
	Privately owned Agricultural (non-grantable)	$ 323	$ 345
	Total	**$ 177,000**	**$ 188,988**
**	Represents 2/3 of the total value assessed to eligible lands.		
*	Represents 1/3 recovered from OMAF (Provincial Grant)		

As shown in the table above, a portion of a Section 78 assessment for drainage works described in an engineer's report are eligible for grants by the Ontario Ministry of Agriculture, Food and Rural Affairs (OMAFRA) and the provisions set out in Sections 85, 86 and 87 of the *Drainage Act.* Upon completion of the application form, the Minister may pay to the treasurer of the town 33 1/3 per cent of the assessments eligible for grant in accordance with the Agricultural Drainage Infrastructure Program.

The Town of Tecumseh lands has been assessed in the engineer's estimate in the report for Special Benefit in the amount of $3,725, for Benefit Liability in the amount of $7,562, and Outlet Liability of $4,127 totaling $15,414. The final assessment will reflect the increased or decreased costs to all lands based on individual tender item prices and how they affect the non-pro-ratable costs and Special Benefit costs on the project. Any increase as a result of the lowest tender price received in respect to construction of the works will be calculated once substantial completion is achieved and the summations of final costs are collected by the consultant.

A copy of the Municipal Drain Lifecycle Reserve is included in Attachment 2 for reference.

LINK TO STRATEGIC PRIORITIES

No.	2015-16 Strategic Priorities	Applicable
1.	Make the Town of Tecumseh an even better place to live, work and invest through a shared vision for our residents and newcomers.	
2.	Ensure that the Town of Tecumseh's current and future growth is built upon the principles of sustainability and strategic decision-making.	✓
3.	Integrate the principles of health and wellness into all of the Town of Tecumseh's plans and priorities.	
4.	Steward the Town's "continuous improvement" approach to municipal service delivery to residents and businesses.	✓
5.	Demonstrate the Town's leadership role in the community by promoting good governance and community engagement, by bringing together organizations serving the Town and the region to pursue common goals.	

COMMUNICATIONS

Not applicable ☒

Website ☐ Social Media ☐ News Release ☐ Local Newspaper ☐

This report has been reviewed by senior Administration as indicated below and recommended for submission by the CAO.

Prepared by:

Cheryl Curran, BES
Clerk I – Administrative Clerk

Reviewed by:

Sam Paglia, P.Eng.
Drainage Superintendent

Reviewed by:

Phil Bartnik, P.Eng., PMP
Manager Engineering Services

Reviewed by:

Dan Piescic, P.Eng.
Director Public Works & Environmental Services

Reviewed by:

Laura Moy, Dipl M.M., CMM III HR Professional
Director Corporate Services & Clerk

Reviewed by:

Luc Gagnon, CPA, CA, BMath
Director Financial Services & Treasurer

Recommended by:

Tony Haddad, MSA, CMO, CPFA
Chief Administrative Officer

Attachments:

1. Rood Engineering Inc. – Tender Review
2. Municipal Drain Lifecycle Reserve

ATTACHMENT 1
Engineer's Tender Review

Rood
Engineering
Inc.

Consulting Engineers

VIA email

March 3rd, 2017

Corporation of the Town of Tecumseh
Attn: Janey Murphy, Purchasing Officer
917 Lesperance Road
Tecumseh, Ontario
N8N 1W9

Dear Janey:

WEST BRANCH DELISLE DRAIN – E09DE(23)
(Geographic Township of Sandwich South)
Project No. REI2014D004
Town of Amherstburg, County of Essex

Tenders for the above noted project closed on Thursday March 2nd and were opened shortly afterwards by the Town. The documents were emailed to our office and reviewed on Friday. Three (3) Tenders were received for this project and these may be summarized as follows:

ITEM No.	CONTRACTOR	TENDER AMOUNT (excl. H.S.T.)	START DATE	COMPLETION DATE
1.	Murray Mills Excavating & Trucking (Sarnia) Ltd.	$ 120, 655.00	10 days	4 weeks
2.	Nevan Construction Inc.	$ 146,900.00	8 weeks	8 weeks
3.	H.E. Construction Inc.	$ 217,673.35	4 weeks	10 weeks

All of the Contractors have provided a Bid Bond or certified cheque in the amount of at least 10% of the tender price as set out in the tender form.

The Murray Mills Tender is generally complete and accurate but did not include unit prices. Their tender also has a very low price for Item 10 rock protection amounting to $7.50/tonne, which is approximately 10% of the typical price for this work. The Murray Mills price is above the Engineer's Report Estimate of $110,000.00, amounting to 110% of the report value. We find the unit prices generally appear to be fair and balanced with the exception noted above. The price for this Tender is considerably lower than the other Tenders for the work.

9 Nelson Street
Leamington, ON N8H 1A1
519-322-1621
gerard@roodengineering.ca

The prices for Item 13 brushing in the Nevan and H.E. Construction tenders are very high compared to the Murray Mills price and the drainage report estimate. The next lowest Tender of Nevan, at $146,900.00, is 34% above the Engineer's Estimate. The Town would have to go back to the owners to consider this price if Nevan was to be awarded the job, or for the other Tender submitted. The Nevan Tender is complete and accurate and appears balanced except for the high brushing cost.

The Tender by H.E. Construction was accurate and appears balanced except for a relatively high brushing cost. Overall, the 3 tenders have a mix of the lowest, mid range and highest price for each of the tender items suggesting that they are generally balanced and fair.

Based on all of the above, we would recommend that the Town enter into an Agreement with Murray Mills Excavating & Trucking (Sarnia) Ltd. in the amount of $136,340.15. This amount includes $15,685.15 Harmonized Sales Tax (H.S.T.). This Tenderer for the project has indicated a relatively short start up time so we expect that construction for this project should be able to commence as soon as a Contract has been completed and the Contractor can schedule its forces. Should the Town deem it appropriate, a change order could be issued for the rock protection work to bring the pricing to the typical cost of $75.00/tonne and a total of $7,500.00 plus H.S.T. for this item. This would increase the total tender price to 116% of the drainage report estimate, and still be acceptable pursuant to the 133% percent allowed under the Drainage Act, and still be the lowest tender. Should the Town provide instructions, we can proceed to prepare the Agreement form for the construction of the works and arrange for the Contractor and the Municipality to sign them based on the Contractor selected by the Town.

We trust that the above is sufficient for your purposes. Should there be any questions regarding same, please do not hesitate to contact us.

We respectfully remain,

Yours very truly,

Rood Engineering Inc.

Gerard Rood

Gerard Rood, P.Eng.

GR/

ATTACHMENT 2
Municipal Drain Lifecycle Reserve

Municipal Drain Lifecycle Reserve - February 28, 2017					
	2017	2018	2019	2020	2021
Reserve Balance Start of Year (est.)	$171,462	$59,513	$129,513	$199,513	$269,513
Allocation	$70,000	$70,000	$70,000	$70,000	$70,000
Road LC re 10th Conc. Windsor (5055)	$226,000				
Funds Available	**$467,462**	**$129,513**	**$199,513**	**$269,513**	**$339,513**
Committed					
South McPhee Drain (5014)	$27,928				
West Branch Delisle (5036)	$15,414				
O'Keefe (5044)	$20,719				
South Talbot/Holden Branch (5027)	$23,020				
McPherson East (5028)	$32,890				
South Malden (Lower) & Graham (5033)	$12,443				
10th Concession - Windsor (5055)	$247,000				
7th Conc & Extension (5047)	$28,535				
Balance Committed	**$407,949**	**$0**	**$0**	**$0**	**$0**
Balance Uncommitted	**$59,513**	**$129,513**	**$199,513**	**$269,513**	**$339,513**
Proposed					
Total Proposed	**$0**	**$0**	**$0**	**$0**	**$0**
Balance Available	**$59,513**	**$129,513**	**$199,513**	**$269,513**	**$339,513**

THE CORPORATION OF THE TOWN OF TECUMSEH

BY-LAW NUMBER 2017-14

Being a by-law to authorize the execution of an Amendment to the Grant Funding Agreement between The Corporation of the Town of Tecumseh and Her Majesty the Queen in Right of Ontario as represented by the Minister of the Environment and Climate Change (Source Protection Municipal Implementation Fund)

WHEREAS the parties entered into a grant funding agreement under the Source Protection Municipal Implementation Fund, dated as of December 13, 2013, for the Municipality to build municipal capacity to implement source protection plans and support sustainable local actions to protect drinking water;

AND WHEREAS the parties entered into Amendment No. 1 as of September 23, 2015, to extend the term of the Agreement, add an additional report and include new timelines;

AND WHEREAS the parties entered into Amendment No. 2 as of July 6, 2016, to extend the term of the Agreement, add an additional report, include new timelines, and expand the scope of eligible activities;

AND WHEREAS pursuant to Section 20.2 of the Agreement, the parties may amend the agreement in writing;

AND WHEREAS under Section 5 of the *Municipal Act 2001*, S.O. 2001 c.25, the powers of a municipality shall be exercised by its Council by by-law;

NOW THEREFORE THE COUNCIL OF THE CORPORATION OF THE TOWN OF TECUMSEH HEREBY ENACTS AS FOLLOWS:

1. **THAT** the Mayor and the Clerk be and they are hereby authorized and empowered on behalf of The Corporation of the Town of Tecumseh, to execute a third Amending Grant Funding Agreement between The Corporation of the Town of Tecumseh and Her Majesty the Queen in Right of Ontario as represented by the Minister of the Environment and Climate Change, dated the 3rd day of March, 2017, a copy of which Amending Grant Funding Agreement is attached hereto and forms part of this by-law and to do such further and other acts which may be necessary to implement the said Grant Funding Agreement.

2. **AND THAT** this by-law shall come into force and take effect upon on the date of the third and final reading thereof.

READ a first, second and third time and finally passed this 14th day of March, 2017.

_____
Gary McNamara, Mayor

"SEAL"

_____
Laura Moy, Clerk

AMENDMENT NO. 3
to a Grant Funding Agreement under the
2013-14 Source Protection Municipal Implementation Fund (SPMIF_1314_182)

THIS AMENDMENT NO. 1 made in duplicate, as of the 3rd day of March 2017,

B E T W E E N:

HER MAJESTY THE QUEEN IN RIGHT OF ONTARIO
as represented by the Minister of the Environment and Climate Change

(the **"Province"**)

- and -

The Corporation of the Town of Tecumseh

(the "**Municipality**")

WHEREAS the parties entered into a grant funding agreement under the Source Protection Municipal Implementation Fund dated as of December 13, 2013 for the Municipality to build municipal capacity to implement source protection plans and support sustainable, local actions to protect drinking water (the "**Agreement**");

AND WHEREAS the parties entered into Amendment No. 1 as of September 23, 2015 to extend the term of the Agreement, add an additional report and include new timelines;

AND WHEREAS the parties entered into Amendment No. 2 as of July 6, 2016 to extend the term of the Agreement, add an additional report, include new timelines, and expand the scope of eligible activities;

AND WHEREAS pursuant to Section 20.2 of the Agreement, the parties may amend the Agreement in writing;

NOW THEREFORE in consideration of the contractual relationship between the Municipality and the Province referred to above and other good and valuable consideration, the receipt and sufficiency of which is hereby acknowledged by both parties, the Municipality and the Province hereby acknowledge, agree and undertake as follows:

1. Unless otherwise specified in this Amendment No. 3, capitalized words and phrases have their prescribed meaning as set out in the Agreement.

2. The Agreement is amended as follows:

   2.1 Section 2.1 as amended by Amendment No. 2 is again deleted in its entirety and replaced with the following:

2.1 The term of the Agreement shall commence on the Effective Date and shall expire on **March 31, 2018** unless terminated earlier pursuant to Article 9. The Municipality shall, upon expiry or termination of the Agreement, return to the Province any Funds remaining in its possession or under its control.

2.2 The chart in Schedule "D" (Reports) as amended by Amendment No. 2 is again deleted in its entirety and replaced with the following:

Name of Report	Due Date
Collaboration Statement (if applicable)	December 12, 2014
Progress Report 1	December 12, 2014
Progress Report 2	December 11, 2015
Progress Report 3	August 26, 2016
Progress Report 4	August 25, 2017
Final Report	December 8, 2017
Other Reports as specified from time to time	On a date or dates specified by the Province.

2.3 The first paragraph under the heading Section B.1 Eligible Activities, in Schedule B is hereby deleted and replaced with the following:

The Municipality may only spend the Funds on the following eligible activities that are undertaken by the Municipality, or that are undertaken on the Municipality's behalf, between December 13, 2013 and December 4, 2017 that are directly related to the following:

3. This Amendment No. 3 shall be in force from December 13, 2013 and shall have the same expiry or termination date as the Agreement.

4. All other terms and conditions of the Agreement and Amendment No. 1 and Amendment No. 2 shall remain in full force and effect unchanged and unmodified.

5. This Amendment No. 3 shall enure to the benefit of and be binding upon the Municipality and the Province and each of their administrators, permitted successors and permitted assigns, respectively.

6. This Amendment No. 3 may be executed in any number of counterparts, each of which shall be deemed an original, but all of which together shall constitute one and the same instrument. To evidence its execution of an original counterpart, a party may send a copy of its original signature on the execution page hereof to the other party by facsimile or other means of recorded electronic transmission (including in PDF) and such transmission with an acknowledgement of receipt shall constitute delivery of an executed copy of this Amendment.

IN WITNESS WHEREOF the parties have executed this Amendment No. 3 as of the date first written above.

HER MAJESTY THE QUEEN in Right of Ontario
as represented by the Minister of the Environment and Climate Change

_____

Name: Heather Malcolmson
Title: Director
Source Protection Programs Branch

Pursuant to delegated authority.

The Corporation of the Town of Tecumseh

_____

Name: Gary McNamara
Title: Mayor

_____

Name: Laura Moy
Title: Director, Staff Services/Clerk

We have authority to bind the Municipality.

THE CORPORATION OF THE TOWN OF TECUMSEH

BY-LAW NUMBER 2017-15

Being a by-law to provide for the repair and
improvements to the Seventh Concession Drain

WHEREAS the Council of The Corporation of the Town of Tecumseh [Town] has been requested to provide for the repair and improvement of the Seventh Concession Drain;

AND WHEREAS the Town procured a Drainage Report for the Seventh Concession Drain and specifications from the consulting engineering firm of Baird AE, dated February 7, 2017;

AND WHEREAS notice of a Public Meeting to hear comments from the affected property owners was given on February 13, 2017;

AND WHEREAS a Public Meeting of Council was held on Tuesday, March 14, 2017, at 6:00 p.m. to hear from any affected property owners on the Drainage Report;

AND WHEREAS the Council of The Corporation of the Town of Tecumseh is of the opinion that the repair and improvement of the Seventh Concession Drain is desirable;

NOW THEREFORE the Council of The Corporation of the Town of Tecumseh, pursuant to *The Drainage Act, R.S.O.1990* (Act), hereby enacts as follows*:*

1. **THAT** the Drainage Report providing for the repair and improvement of the Seventh Concession Drain, dated February 7, 2017, as prepared by the consulting engineering firm Baird AE and attached hereto as Schedule "A" to this by-law, is hereby adopted and the drainage works as therein indicated and set forth is hereby approved and shall be completed in accordance therewith.

2. **THAT** the Treasurer, subject to the approval of Council, may agree with any bank or person for temporary advances of money to meet the costs of construction pending the completion of the drain and grants and computed payments are received.

3. **THAT** the Town may issue debentures for the amount borrowed and the amount of such debentures shall be reduced to the total amount of:
   (a) Grants received under Section 85 of the said Act;
   (b) Commuted payments made in respect of land and roads assessed.

4. **THAT** such debentures shall be made payable within five (5) years from the date of the debenture and shall bear interest at a rate as approved by resolution of Council.

5. **THAT** the specifications and General Specifications as established are adopted as set out in the Drainage Report which forms part of this by-law.

6. **THAT** the Mayor and Clerk are authorized to cause a contract for the construction of the works to be made and entered into with some person or persons, firm or corporations, subject to the approval of the Council to be declared by resolution.

7. **THAT** this by-law shall come into force upon and after the final passing thereof.

READ a first and second time this 14th day of March, 2017.

_____
Gary McNamara, Mayor

_____
Laura Moy, Clerk

READ a third and final time, and finally passed this ___day of _____, 2017.

_____
Gary McNamara, Mayor

_____
Laura Moy, Clerk

Repair and Improvement to the 7th Concession Drain

Town of Tecumseh

August 16, 2016
(Draft – Town Review)
February 7, 2017
(Final – Council Consideration)

Project No. 14-105

BAIRD|AE
architecture + engineering
27 Princess St., Unit 102
Leamington, ON N8H 2X8
519.326.6161 TF 1.844.842.9188
bairdAE.ca

February 7, 2017

Mayor and Municipal Council
The Corporation of the Town of Tecumseh
917 Lesperance Road
Tecumseh, Ontario
N8N 1W9

Mayor McNamara and Councillors

Subject: Repair and Improvement
To the 7th Concession Drain
In the Town of Tecumseh
Our File Reference 14-105

1.0 Authorization

Pursuant to Section 78 of The Drainage Act, 1990 (the Act), the Corporation of the Town of Tecumseh received a request for the repair and improvement of the 7th Concession Drain. The firm of Crozier Baird, now known as Baird AE, was subsequently appointed to prepare a report as provided for under the provisions of the Act.

As requested by Council, we have made an examination of the 7th Concession Drain located along the north side of North Talbot Road commencing approximately 14 metres east of Walker Road. The drainage area encompasses land between County Road 46 to the north and North Talbot Road to the south; Walker Road to the west and Ure Street to the east.

2.0 Drainage Act Process

The following is the general order of procedure that is followed to repair and improve a municipal drainage system pursuant to Section 78 of the Drainage Act:

a) Council determines that repair and improvements are required.
b) Council appoints an Engineer.
c) Engineer conducts an onsite meeting.
d) Engineer conducts a survey of the drain.
e) Need for preparation of a Preliminary Report is decided.
f) Engineer completes and provides a Preliminary Report, if required.
g) Council considers Preliminary Report, if required, with affected landowners and decides on an option(s) with which to proceed.
h) A Draft Report is provided to the Municipality.
i) A Public Information Centre (PIC) is held with affected landowners to discuss the report prior presenting the final report to Council.
j) Engineer prepares Final Drainage Report and provides copy to the Municipality.
k) Meeting to Consider the report held in front of Council with affected landowners.
l) At the Meeting to Consider, the Municipal Council may adopt the Drainage Report. If adopted, the Municipal Clerk prepares a provisional by-law for the recommended work and sends copies of the by-law to affected parties and arranges a second meeting of Council for the Court of Revision, within thirty days of adopting the provisional by-law.
m) The Court of Revision is typically held within 30 days at a subsequent meeting with affected landowners to discuss any disputes regarding assessment of cost to lands and roads.

n) Council passes by-law for construction of the work after statutory appeal period expires. Typically, the appeal period is a minimum of 40 days from the date of the provisional by-law.
o) Tenders are received by the Municipality to perform the recommended work and construction is carried out. Inspection of the construction work may be provided by the Town Drainage Superintendent or by an inspector from the engineering office.
p) Upon completion of construction, the Municipal Clerk will finalize all applicable costs and submit grant applications to the Ministry of Agriculture and Food, if applicable. The clerk will then send a final net assessment to the affected landowners. Only lands listed by the Municipal Property Assessment Corporation as having Farm Class Tax Rate are eligible for a 1/3 grant.

3.0 Current Drainage Report and Drain History

Work has been completed on the 7th Concession Drain under various Engineers' reports. Previous works and reports are as follows:

Report dated November 18, 2008 prepared by Tim Oliver, P.Eng. (Dillon Consulting): recommended repairs, realignment, deepening of the downstream section of the 7th Concession Drain from the 7th Street Drain Outlet Diversion southerly approximately 1.321 metres to the former railway. The drain was widened and deepened by approximately 1 metre. As part of this report, the first 444 metres were cleaned and the remainder was constructed to the design grades by MTO as part of the Highway 401 improvements. (It should be noted that MTO construction only went to Provincial Road (Station 1+138).)

Report dated July 8, 1991 prepared by Lou Zarlenga, P.Eng.: recommended repair and improvements entailed enclosing the open portion of the drain adjacent to and along the north side of North Talbot Road; removing accumulated brush and sediment from the open drain; deepening and widening and providing additional outlet to that portion of the drain situated north of Moynahan Street to just south of Highway No. 401.

Report dated June 9, 1978 prepared by Maurice Armstrong, P.Eng.: recommended that the extension of the 7th Concession Drain be established as a municipal drain. The extension commenced 14 metres east of Walker Road and continued easterly along the north side of North Talbot Road to the point where the drain turns north. The report further recommended that the 7th Concession Drain be cleaned form the north side of North Talbot Road to the drain's outlet. Repair and improvement of various culvert pipes was recommended as well.

A review of the current report indicates that the existing drainage area is approximately 57.83 ha (143.01 acres) in size.

4.0 Purpose of Report

The purpose of this report is to provide for the repair and improvement of the drain from Station 1+321 just north of the former railway to the upper end at Walker Road. Affected landowners have raised issue with the functioning of the drain particularly in the area near Del Duca Drive.

This report provides a description and estimated cost of the proposed work. In addition, the report provides a recommendation for distribution of the construction and incidental costs related to the work. This report further provides for the distribution of future maintenance costs. The assessments provided in this report are based upon the estimated cost of the work; these assessments would be pro-rated to the actual cost of the project upon completion of the works.

We would further recommend that this report incorporate the 7th Concession Drain Extension into the 7th Concession Drain and the entirety of the drain be known as the **7th Concession Drain.**

5.0 Site Meeting

On Wednesday, August 27, 2014 at 9:00am, a meeting was held on Del Duca Drive to discuss the project. The following people attended the site meeting:

Landowners Present	Affiliation
Greg Scott	Tregaskiss
Ray Little	Calframax
Joel Fillion	Morton Wholesale
Anna Godo, P.Eng.	City of Windsor
Sam Paglia, E.I.	Town of Tecumseh
Ryan Langlois, EI	Baird AE
Halliday Pearson, P.Eng.	Baird AE

A written record of this meeting is contained in Appendix A of this report.

A Public Information Centre (PIC) was held on September 14, 2016 at 5:00 pm at the Tecumseh Municipal office. This meeting was held to receive comments from property owners with respect to the draft report dated August 16, 2016.

Landowners Present	Affiliation
Loris Collavino	PSI
Ryan Lawson	Expressway Trucks
Gregg Strong	Expressway Trucks
Sam Paglia, P.Eng.	Town of Tecumseh
Cheryl Curran	Town of Tecumseh
Don Joudrey, P.Eng.	Baird AE
Halliday Pearson, P.Eng.	Baird AE

Mr. Collavino indicated his property being assessed to the 7th Concession Drain has no direct outlet to the 7th Concession Drain and most of the water drains onto neighbouring properties.

It was stated that the property was assessed to the 7th Concession Drain in the previous report. The property will be investigated further to determine where the water actually goes. If some of the property actually drains to the 7th Street Drain, the properties could be included in the other drain but would have to be done through another report. A survey would have to be done to confirm how much property is to be redirected. Alternatively, the parcel may remain in the 7th Concession Drain until such time as neighbours express concerns. A subsequent site visit showed that part of the property does drain to the 7th Concession Drain by way of a swale across the adjacent property to the east.

Mr. Strong indicated he has water ponding in his property because of work to County Road 46. He wanted to know if he could redirect the water to the 7th Concession Drain. He was told he would have to submit a petition for drainage to the Town. Alternatively, the County would have to be contacted to repair the drainage.

Mr. Strong also indicated he had a second drain at the back of his property into the 7th Concession Drain that has not been identified. This will be added to the report.

No further comments were received.

6.0 Topographic Survey

We commenced our survey at the upstream end of the 7th Concession Drain Extension, being the enclosed portion of the drain at Walker Road. Our survey continued easterly for approximately 467 metres before turning north where the drain becomes an open drain. The open drain flows north for approximately 350 metres before crossing Moynahan Street where it continues easterly for approximately 217 metres. The open drain continues north for approximately 447 metres before crossing the former railway. The survey finished approximately 230 metres downstream of the former railway line.

7.0 Existing Conditions

We find that the 7th Concession Drain is in need of repair and requires cleaning pursuant to Section 78 of the Act.

As a result of the survey, we have found the following:

The existing enclosed portion of the drain between Station 2+386.6 and Station 2+848.8 ranges in size from 450mm diameter CSP to 825mm diameter CSP. The Tregaskiss representative present at the onsite meeting noted that their parking lot experiences flooding. It is the Engineer's opinion that the parking lot is designed to flood to act as the stormwater management system. Cleaning of the enclosed and open drain will most likely reduce the time that the parking lot experiences flooding but will not eliminate the flooding due to the stormwater management design.

Considerable sediment has accumulated in the bottom of the drain preventing the proper flow of water, particularly between Station 1+321 and 1+825 and between 1+920 and 2+200. Considerable vegetation is present along the length of the drain between Station 1+350 and Station 1+820. Mature trees outside of the drain bank limit shall remain undisturbed except where necessary to facilitate the proposed works.

We further noted that additional work is required north of the railway to take advantage of the deepened downstream drain. This work shall be carried out separately by the Town as maintenance.

We further found that many of the culverts within the drain are out of vertical alignment but would not significantly impede flows, however most are undersized and will have to be replaced with larger culverts.

The stationing of the upper sections of the drain have been adjusted from previous reports to reflect the stationing laid out in the 2008-83 by-law. We have continued with the stationing from the Provincial Road Culvert (south end is located at Station 1+150). The upper end at Walker Road is now Station 2+848.8.

There is currently one road crossing on the 7th Concession Drain as described below:

Culvert No. 7– Moynahan Street, Town of Tecumseh
Station 2+054
The existing 900mm diameter corrugated steel pipe is in good condition; however, hydraulic calculations indicate that the pipe is undersized. Concrete pieces and rocks form the end of pipe protection at the downstream end of the crossing. End of pipe protection is absent from the upstream end of the crossing. This structure is currently identified as part of the 7th Concession Drain under the current by-law.

There are currently six culverts within the 7th Concession Drain as described below:

Culvert No. 1 and 2 – Detroit River Tunnel Company, Roll No. 590-01000
Station 1+379
There are currently two pipes under the former railway. The existing 15.55 metre 1200mm diameter ductile iron pipe (Culvert No. 2) is in good condition; however, the invert elevation of the pipe is approximately 150mm above the bottom of the existing drain. An 18.30 metre 600mm diameter welded steel casing pipe (Culvert No. 1) was installed under the 1991 Zarlenga report beside the existing 1200mm diameter pipe. The invert of this pipe matches the existing grade at this location. The limited capacity of the 600mm diameter pipe and the improper elevation of the 1200mm diameter pipe together prevent the proper flow of water within the drain. End of pipe protection was not found for either structure. These pipes are in place to allow the flow of water northerly under the former railroad tracks and are currently identified as part of the 7th Concession Drain under the current by-law.

It should be noted the railway is not currently in use and now ends at 8th Concession Road approximately 800 metres east of the existing railway culverts.

Culvert No. 3 – SGM Real Estate Holdings ULC, Roll No. 550-01500
Station 1+854
The existing 900mm diameter corrugated steel pipe is in good condition; however, hydraulic calculations indicate the pipe is undersized. Poured concrete headwalls are in good condition. This structure provides access to commercial lands and is identified as part of the 7th Concession Drain under the current by-law.

At the landowner's request, the length and location of the culvert has been modified to that described in Section 8.0 Recommendations and shown on the attached plans.

Culvert No. 4 – Adine Builders Ltd., Roll No. 550-01600
Station 1+909
The existing 900mm diameter corrugated steel pipe is in good condition; however, hydraulic calculations indicate that the pipe is undersized. Poured concrete headwalls are in satisfactory condition although cracking was noted on the upstream headwall. The elevation of the culvert does not correspond to the design grade of the drain bottom. This structure provides access to commercial lands and is identified as part of 7th Concession Drain under the current by-law.

Culvert No. 5 – Gail Rodzik and Pamela Rodzik, Roll No. 550-02000
Station 1+957
The existing 900mm diameter corrugated steel pipe is in good condition; however, hydraulic calculations indicate that the pipe is undersized. Concrete jute bag headwalls are in good condition. The elevation of the culvert does not correspond to the design grade of the drain bottom. This structure provides access to industrial lands and is not identified as part of the 7th Concession Drain under the current by-law.

We would further recommend this culvert be incorporated into the 7th Concession Drain under this report.

Culvert No. 6 – Gail Rodzik and Pamela Rodzik, Roll No. 550-02100
Station 2+034
The existing 900mm diameter corrugated steel pipe is in good condition; however, hydraulic calculations indicate that the pipe is undersized. Concrete jute bag headwalls are in poor condition. The top layers of the jute bag headwalls have collapsed. The elevation of the culvert does not correspond to the design grade of the drain bottom. This culvert provides access to

industrial lands and is identified as part of the 7th Concession Drain under the current by-law.

Based on the existing conditions and a review of the theoretical drain profile provided in the 1991 Zarlenga report and the existing downstream drain elevations set out in the 2008 Dillon Report, we have determined that cleaning of the enclosed portion of the drain between Station 2+386.6 and 2+848.8; brushing, grubbing and excavating the open drain sections; cleaning existing road crossings and driveway culverts, deepening and widening the drain from Station 1+320 to Station 1+813 including installation of a new 1800mm diameter aluminized CSP across the former railway to match the drain depths in the Dillon Report will improve drain function.

We have found that additional catch basins have been installed on lands near the intersection of Hennin Drive and North Talbot Road. These catch basins direct flow to a municipal drain on the south side of North Talbot Road thereby altering the watershed from that identified in the 1991 Zarlenga report.

In addition, it was discovered that at the time of the MTO works in 2008, the portion of the 7th Concession Drain draining the property with Roll No. 550-18800 was not properly graded towards the relocated portion of the drain. As such, it is causing drainage issues to the property. This section of drain must be lowered below the outlet of the drainage system for Expressway Trucks (905364 Ontario Ltd) and graded southerly to the 7th Concession Drain. We would recommend that this section of drain be incorporated into the 7th Concession Drain under this report.

Since this work on Roll No. 550-18800 has been identified as an issue well before the works in this report can be carried out, repairs will be initiated by the Town as maintenance work through the existing 2008 report.

8.0 Recommendations

We would recommend the following works be performed in order to overcome the above noted deficiencies:

a) Excavation work shall be undertaken to remove accumulated sediment and vegetation within the drain:
   i. Excavation to theoretical drain bottom shall be undertaken between Station 1+825 and Station 2+386.6;
   ii. The section of drain between Station 1+321 and Station 1+825 shall be lowered by approximately 400 to 500 mm, to match the grades from the 2008 Dillon Report as shown on Sheet 3 of the drawings, to provide a deeper outlet for adjacent properties.

b) New culverts and end of pipe protection shall be installed:
   i. The existing 600mm diameter welded steel pipe and 1200mm diameter ductile iron pipe at Station 1+379 (crossing the former railway line) shall be removed from the drain and disposed of offsite. Culvert No. 1 and 2 shall be replaced with 16.0m of new 1800mm aluminized corrugated steel pipe with sloped gabion stone end of pipe protection and be known as Culvert No. 8. The new culvert will be installed by open cut.
   ii. Culvert No. 9 at Station 1+544: A new culvert, at the end of Del Duca Drive, shall be constructed of 20.0m of new 1800mm diameter class 65-D concrete pipe with sloped gabion stone end of pipe protection.

c) Existing culverts and end of pipe protection shall be removed and replaced:
   i. Culvert No. 3 at Station 1+854: The existing 24.69 metres 900mm pipe shall be removed and replaced with 22.0 metres of 1200mm diameter CSP with concrete block headwalls;
   ii. Culvert No. 4 at Station 1+909: The existing 12.51 metres of 900mm pipe shall be removed and replaced with 12.5 metres of 1200mm diameter C.S.P. with concrete block headwalls;
   iii. Culvert No. 5 at Station 1+957: The existing 11.79 metres of 900mm pipe shall be removed and replaced with 11.8 metres of 1200mm diameter C.S.P. with concrete block headwalls;
   iv. Culvert No. 6 at Station 2+034: The existing 12.21 metres of 900mm pipe shall be removed and replaced with 12.2 metres of 1200mm diameter C.S.P. with concrete block headwalls;
   v. Culvert No. 7 at Station 2+054: The existing 12.47 metres of 900mm pipe shall be removed and replaced with 12.5 metres of 1050mm diameter class 65-D concrete pipe with concrete block headwalls;

d) Existing enclosed pipe network to be cleaned:
   i. The existing enclosed portion of the drain between Station 2+386.6 and Station 2+848.8 shall be cleaned;

e) Seeding and mulching shall be undertaken on all excavated portions of the drain side slopes to prevent erosion;

For the enclosed drain between Station 2+386.6 and Station 2+848.8, we would recommend that these pipes, manholes and catch basins remain in place, however, when the pipes and structures degrade to the point of replacement, we would recommend that the pipes be replaced under this by-law as an act of maintenance and assessed in accordance with proportions set out in the maintenance clauses of this report and any apportionment agreements in place at the time of replacement.

In previous drafts of this report, we had recommended that Culvert No. 9 be constructed of aluminized corrugated steel pipe. The Town did not have an objection to this proposal as it would appropriately service the property with Roll No. 550-07900 as it functions today. However, the Owner was advised by the Town and the Engineer that should the site be developed with a future extension of the Del Duca Drive municipal right-of-way the Town standards for road crossings in industrial subdivisions, being the use of concrete pipe, would apply. Through a Development Agreement, the Town would seek to have the aluminized corrugated steel pipe replaced with a concrete pipe through the necessary sections of Act. This change in culvert material would be required as the culvert would shift from a driveway with costs shared between the owner and upstream lands and roads to a road crossing assessed 100% to the Town of Tecumseh. Therefore, in consultation with the owner, the report has been revised to recommend installation of a concrete pipe for Culvert No. 9.

The owner of lands with Roll No. 550-07900 and 550-07950 owned by 1078217 Ontario Ltd. and 803102 Ontario Ltd., has brought to our attention the desire to continue to utilize the 7th Concession Drain as an outlet for existing drainage on these properties. Should future development occur, we would recommend that it be subject to a storm water management report to ensure all Ministry of Environment requirements for stormwater management are satisfied. We would further recommend implantation of a stormwater management plan to restrict the rate at which water is discharged from the property to pre-development flows. Pre-development flows were used when hydraulically calculating the diameter of Culvert No. 9. We would further recommend the supply and placement of gabion stone at the outlet to prevent bank slope erosion.

9.0 Fisheries Issues

The 7th Concession Drain is a Type 'F' drain. A Type 'F' drain is considered to have intermittent or ephemeral flow. A drain with ephemeral flow is typically dry for more than two consecutive months.

The upper portion of the 7th Concession Drain, formerly the 7th Concession Drain Extension, between Station 2+386.6 and Station 2+848.8 is an enclosed drain that cannot support fish habitat.

We would recommend the following measures be utilized to mitigate damage to the drain during construction:

- No work shall be undertaken between March 15 and June 30
- All work shall be completed in the dry
- Culverts shall be installed with a minimum of 10.0% embedment
- All disturbed soils shall be stabilized upon completion of the work
- Silt fence sediment control shall be implemented during construction
- Contractor shall prevent entry of petroleum products, debris and deleterious substances into the water.

A review of the Sensitive Areas Maps for the Town of Tecumseh indicates that no endangered species, as listed under the Endangered Species Act, are expected to be encountered at the site of the proposed works.

A Fisheries and Oceans Canada (DFO) Self-Assessment was completed by Baird AE to determine if a DFO review was required for this project. Correspondence received from DFO states that Fisheries Act authorization is not required. Serious harm to fish can be avoided by following standard measures. A permit is not required under the Species at Risk Act as there are no Species at Risk at or near the site. The works described in this report are not considered to need an authorization under the Fisheries Act to proceed.

10.0 Drawings and Specifications

Attached to this report is Drawing No. 14-105 Sheets 1 to 7. The drawings illustrate the location of the proposed drainage works and the land affected by the work, together with the detail and cross sections of the recommended work. Specifications are included in this report showing the dimensions, grades, disposal of material, working areas for construction and future maintenance, and other particulars of the recommended work.

11.0 Working Area

The areas available to the Contractor to be used for the purpose of constructing the recommended works of this report and for construction and future maintenance as provided for under Section 63 of the Act are described as follows:

Between Station 0+000 and Station 0+028: The Contractor shall utilize an area measuring approximately 9.0 metres wide along the west side of the drain.

Between Station 1+321 and Station 1+825: The Contractor shall utilize an area measuring approximately 9.0 metres wide along the west side of the drain.

Between Station 1+825 and Station 2+042: The Contractor shall utilize the Moynahan Street right-of-way.

Between Station 2+042 and Station 2+386.61: The Contractor shall utilize an area measuring 9.0 metres wide along the west side of the drain.

Between Station 2+386.61 and Station 2+848.8: The Contractor shall utilize the North Talbot Road right-of-way.

12.0 Allowances for Lands Taken and Damages

In accordance with the provisions of the Act, monetary allowances are provided to those landowners from which land is required to be used for the construction of a new drain or for the establishment of an easement for the construction and future maintenance of a drain or for land required to dispose of excavated material or for land required to obtain access to a Municipal Drainage System.

We find that no land is required to be used for the construction of a new drain or for the establishment of an easement for the construction and future maintenance of a drain or for land required to obtain access to a Municipal Drainage System, therefore, we have not provided any allowance for lands taken in our estimate as is otherwise normally provided for under sub-section (a) of Section 29 of the Act.

We further find that each of the following owners is entitled to and should receive the following amounts as compensation for the damages to lands and crops, if any. We have used a rate of $3,700 per hectare to determine the compensation paid, if any:

Owner	Roll No.	Lands Taken	Damages	Total
Detroit River Tunnel Company	590-01000	---	$123	$123
1078398 Ontario Ltd.	550-07900	---	$962	$962
1147048 Ontario Ltd.	550-02300	---	$481	$481
Morbella Holdings Ltd.	550-02902	---	$592	$592
SGM Real Estate Holdings ULC	550-01500	---	$444	$444
				$2,602

We have provided for this in our estimate as is provided for under sub-section (b) of Section 29 of the Act.

13.0 Estimate of Cost

Our estimate of the total cost of this work, including all incidental expenses and HST, is the sum of THREE HUNDRED AND THIRTEEN THOUSAND, SIX HUNDRED AND SIXTY ----------dollars ($313,660.00), and made up as follows:

CONSTRUCTION

1) L.S. Brushing and grubbing between Station 1+321 and Station 2+386.6 complete at $10,000 Lump Sum. $ 10,000.00

2)	462	Metres of existing 450mm to 825mm diameter corrugated steel pipe to be cleaned between Station 2+386 and Station 2+848.8 including all inline manholes and catch basins at $ 10.00 per metre		$ 4,620.00
3)	1,830	Cubic metres of excavation to be undertaken along the length of the drain as described in the attached specifications and below:		
		i) Spread and levelled adjacent to the drain to a maximum depth of 300mm.		
	1,275	- Station 1+321 to 1+750 at $ 20.00 per cubic metre	$ 25,500.00	
	165	- Station 2+054 to 2+386.6 at $ 20.00 per cubic metre	$ 3,300.00	
		ii) Excavated and trucked to sites noted in i). Material to be spread and levelled to a maximum depth of 300mm.		
	245	- Station 1+750 to 1+825 at $ 30.00 per cubic metre	$ 7,350.00	
	145	- Station 1+825 to 2+054 at $ 30.00 per cubic metre	$ 4,350.00	
		Total for Excavation		$ 40,500.00
4)		Proposed culvert at Station 1+379 for the Detroit River Tunnel Company (Culvert No. 8):		
		i) Remove and dispose of existing 600mm welded steel pipe (Culvert 1) and 1200mm ductile iron pipe (Culvert 2) crossing under the former railway at station 1+359. To be open cut (rails not replaced) at $ 3,000.00 Lump Sum	$ 3,000.00	
		ii) Supply and set approximately 16 metres of 1800 mm diameter aluminized corrugated steel pipe, 2.8mm thick with 125 x 25 mm corrugations complete at $ 500.00 per metre	$ 8,000.00	
		iii) Supply, place and compact approximately 20 tonnes of Granular 'A', as per OPSS 1010, as bedding material and to reconstruct railway bed to original cross-section at $ 35.00 per tonne	$ 700.00	
		iv) Supply, place and compact approximately 110 tonnes of Granular 'B', as per OPSS 1010, as backfill material at $ 20.00 per tonne	$ 2,200.00	
		v) Supply and place 70.0 square metres of 100 – 230mm diameter gabion stone erosion protection (300mm thick) laid on Terrafix 270R Filter Fabric complete at $ 65.00 per square metre	$ 4,550.00	

vi) Supply, install and maintain silt fence erosion protection at downstream end of culvert complete at $ 300.00 Lump Sum $ 300.00

Total to install Culvert No. 8 $ 18,750.00

5) Proposed culvert at Station 1+544 at west end of Del Duca Drive for 1078398 Ontario Ltd. (Culvert No. 9):

i) Supply and set approximately 20 metres of 1800mm diameter class 65-D concrete pipe complete at $ 1,300.00 per metre $ 26,000.00

ii) Supply, place and compact approximately 60 tonnes of Granular 'A', as per OPSS 1010, as bedding and cover material at $ 35.00 per tonne $ 2,100.00

vii) Supply, place and compact approximately 170 tonnes of Granular 'B', as per OPSS 1010, as backfill material at $ 20.00 per tonne $ 3,400.00

iii) Supply and place 30.0 square metres of 100 – 230mm diameter gabion stone erosion protection (300mm thick) laid on Terrafix 270R Filter Fabric complete at $ 65.00 per square metre $ 1,950.00

iv) Supply, install and maintain silt fence erosion protection at downstream end of culvert complete at $ 300.00 Lump Sum $ 300.00

Total to construct Culvert No. 9 $ 33,750.00

6) Existing culvert to be replaced at Station 1+854 for SGM Real Estate Holdings ULC (Culvert No. 3):

i) Remove 24.7 metres of existing 900 mm diameter corrugated steel pipe and granular material and dispose of offsite complete at $ 1,500.00 Lump Sum $ 1,500.00

ii) Supply and set approximately 22.0 metres of 1200 mm diameter aluminized corrugated steel pipe, 2.8mm thick with 68 x 13mm corrugations complete at $ 400.00 per metre $ 8,800.00

iii) Supply, place and compact approximately 50 tonnes of Granular 'A', as per OPSS 1010, as bedding and cover material and to construct driveway at $ 35.00 per tonne — $ 1,750.00

viii) Supply, place and compact approximately 175 tonnes of Granular 'B', as per OPSS 1010, as backfill material at $ 20.00 per tonne — $ 3,500.00

iv) Supply, place and compact approximately 15 tonnes of asphalt at $ 120.00 per tonne — $ 1,800.00

v) Supply and place 2 concrete block headwalls using plain concrete blocks complete as specified at $ 4,500 each. — $ 9,000.00

vi) Supply, install and maintain silt fence erosion protection at downstream end of culvert complete at $ 300.00 Lump Sum — $ 300.00

Total to replace Culvert No. 3 — $ 26,650.00

7) Existing culvert to be replaced at Station 1+909 for Adine Builders Ltd. (Culvert No. 4):

i) Remove 12.5 metres of existing 900 mm diameter corrugated steel pipe and granular material and dispose of offsite complete at $ 1,250.00 Lump Sum — $ 1,250.00

ii) Supply and set approximately 12.5 metres of 1200 mm diameter aluminized corrugated steel pipe, 2.8mm thick with 68 x 13mm corrugations complete at $ 400.00 per metre — $ 5,000.00

iii) Supply, place and compact approximately 40.0 tonnes of Granular 'A', as per OPSS 1010, as bedding material and to construct driveway at $ 35.00 per tonne — $ 1,400.00

iv) Supply, place and compact approximately 100 tonnes of Granular 'B', as per OPSS 1010, as backfill material at $ 20.00 per tonne — $ 2,000.00

v) Supply, place and compact approximately 10 tonnes of asphalt at $ 120.00 per tonne — $ 1,200.00

vi) Supply and place 2 concrete block headwalls using plain concrete blocks complete as specified at $ 4,500.00 each. $ 9,000.00

vii) Supply, install and maintain silt fence erosion protection at downstream end of culvert complete at $ 300.00 Lump Sum $ 300.00

Total to replace Culvert No. 4 $ 20,150.00

8) Existing culvert to be replaced at Station 1+957 for Gail Rodzik and Pamela Rodzik (Culvert No. 5):

i) Remove 11.8 metres of existing 900 mm diameter corrugated steel pipe and granular material and dispose of offsite complete at $ 1,250.00 Lump Sum $ 1,250.00

ii) Supply and set approximately 11.8 metres of 1200 mm diameter aluminized corrugated steel pipe, 2.8mm thick with 68 x 13mm corrugations complete at $ 400.00 per metre $ 4,720.00

iii) Supply, place and compact approximately 40.0 tonnes of Granular 'A', as per OPSS 1010, as bedding material and to construct driveway at $ 35.00 per tonne $ 1,400.00

iv) Supply, place and compact approximately 100 tonnes of Granular 'B', as per OPSS 1010, as backfill material at $ 20.00 per tonne $ 2,000.00

v) Supply, place and compact approximately 10 tonnes of asphalt at $ 120.00 per tonne $ 1,200.00

vi) Supply and place 2 concrete block headwalls using plain concrete blocks complete as specified at $ 4,500 each. $ 9,000.00

vii) Supply, install and maintain silt fence erosion protection at downstream end of culvert complete at $ 300.00 Lump Sum $ 300.00

Total to replace Culvert No. 5 $ 19,870.00

9) Existing culvert to be replaced at Station 2+034 for Gail Rodzik and Pamela Rodzik (Culvert No. 6):

i) Remove 12.21 metres of existing 900 mm diameter corrugated steel pipe and granular material and dispose of offsite complete at $ 1,250.00 Lump Sum — $ 1,250.00

ii) Supply and set approximately 12.2 metres of 1200 mm diameter aluminized corrugated steel pipe, 2.8mm thick with 68 x 13mm corrugations complete at $ 400.00 per metre — $ 4,880.00

iii) Supply, place and compact approximately 40.0 tonnes of Granular 'A', as per OPSS 1010, as bedding material and to construct driveway at $ 35.00 per tonne — $ 1,400.00

iv) Supply, place and compact approximately 100 tonnes of Granular 'B', as per OPSS 1010, as backfill material at $ 20.00 per tonne — $ 2,000.00

v) Supply, place and compact approximately 10 tonnes of asphalt at $ 120.00 per tonne — $ 1,200.00

vi) Supply and place 2 concrete block headwalls using plain concrete blocks complete as specified at $ 4,500 each. — $ 9,000.00

vii) Supply, install and maintain silt fence erosion protection at downstream end of culvert complete at $ 300.00 Lump Sum — $ 300.00

Total to replace Culvert No. 6 — $ 20,030.00

10) Existing culvert to be replaced at Station 2+054 for Town of Tecumseh (Culvert No. 7):

i) Remove 12.47 metres of existing 900 mm diameter corrugated steel pipe and granular material and dispose of offsite complete at $ 1,250.00 Lump Sum — $ 1,250.00

ii) Supply and set approximately 12.5 metres of 1050 mm diameter class 65-D concrete pipe complete at $ 600.00 per metre — $ 7,500.00

iii) Supply, place and compact approximately 40.0 tonnes of Granular 'A', as per OPSS 1010, as bedding material and to construct driveway at $ 35.00 per tonne $ 1,400.00

iv) Supply, place and compact approximately 100 tonnes of Granular 'B', as per OPSS 1010, as backfill material at $ 20.00 per tonne $ 2,000.00

v) Supply, place and compact approximately 15 tonnes of asphalt at $ 120.00 per tonne $ 1,800.00

vi) Supply and place 12.0 square metres of 100 – 230mm diameter gabion stone erosion protection (300mm thick) laid on Terrafix 270R Filter Fabric complete at $ 65.00 per square metre $ 780.00

vii) Supply, install and maintain silt fence erosion protection at downstream end of culvert complete at $ 300.00 Lump Sum $ 300.00

Total to replace Culvert No. 7 $ 15,030.00

11) L.S. Supply and spreading of good quality grass seed and mulch on all portions of excavated sideslopes complete at $ 10,000.00 Lump Sum. $ 10,000.00

12) L.S. The Contractor shall provide a traffic control plan to the Town of Tecumseh and the County of Essex for approval before construction commences. The Contractor shall supply, install and maintain the necessary signage during the construction period according to the latest revision of the Ontario Traffic Manual Book 7, Temporary Conditions, complete at $ 5,000.00 Lump Sum. $ 5,000.00

13) 65.0 Square metres of 100 – 230mm diameter gabion stone (300 mm thick) erosion protection laid on Terrafix 270R Filter Fabric to be placed as required to prevent bank slope erosion due to outlet tiles, drains or swales along length of drain complete at $ 65.00 per square metre. $ 4,225.00

14) L.S. Previously completed excavation of 30 cubic metres between Station 0+000 and Station 0+028 for lands with Roll No. 550-18800 complete at $ 600.00 Lump Sum. This was completed as maintenance and will not form part of the proposed construction. $ 600.00

15) L.S. Contingency Allowance to be used only upon approval of Drainage Superintendent and/ or Engineer $ 11,500.00

SUB TOTAL FOR CONSTRUCTION	**$ 240,675.00**
INCIDENTALS	
Attendance at site meeting, survey	$ 5,000.00
Report, estimate and specifications	$ 28,000.00
Assistants and expenses, drawing preparation	$ 15,750.00
Attendance at Public Meetings and Council Meetings	$ 6,000.00
Tender documents	$ 1,200.00
ERCA Permit Application Fee	$ 800.00
Construction Inspection and Final Inspection (15 days at $550.00/day)	$ 8,250.00
	= = = = = = =
Sub Total for Incidentals	$ 65,000.00
Sub Total for Construction (brought forward)	$ 240,675.00
	= = = = = = =
Sub Total for Construction and Incidentals	$ 305,675.00
HST Payable (1.76% Non-Recoverable)	$ 5,383.00
Total for Allowances (brought forward)	$ 2,602.00
	= = = = = = =
T O T A L E S T I M A T E	**$ 313,660.00**
	= = = = = = =

14.0 Assessment

Assessments to lands are provided in the attached Schedule of Assessment in three separate columns being Special Benefit, Benefit and Outlet. Section 1 of the Act provides the following definitions:

"Special Benefit" *means any additional work or feature included in the construction, repair or improvement of a drainage works that has no effect on the functioning of the drainage works.* A breakdown of how the Special Benefits assessments were calculated is provided on Page 4 of 4 of the Schedule of Assessment.

"Benefit" means *the advantages to any lands, roads, buildings or other structures from the construction, improvement, repair or maintenance of a drainage works such as will result in a high market value or increased crop production or improved appearance or better control of surface or subsurface water, or any other advantages relating to the betterment of lands, roads, buildings or other structures.*

"Outlet Liability" means *the part of the cost of the construction, improvement or maintenance of a drainage works that is required to provide such outlet or improved outlet.*
We would recommend that construction and incidental costs be assessed to the affected properties in accordance with the accompanying Schedule of Assessment.

We would recommend that the cost to remove and replace access culverts and crossings currently identified as part of the drain be shared between the owner and the upstream lands and roads in accordance with the clauses below and the percentages listed in Table 1. The percentages listed in Table 1 were derived based on the culvert's approximate location within the drain.

Culvert No. 5 is not currently identified as part of the 7th Concession Drain. Therefore, 100% of the cost to construct the culvert shall be assessed to the lands with Roll No. 550-01500.

Culvert No. 9 is a new culvert. Therefore, 100% of the cost to construct the new culvert shall be assessed to the lands with Roll No. 550-07900.

Table 1. Cost Sharing for Access Culverts and Crossings over the 7th Concession Drain

Culvert No.	Station	Roll Number	Owner	% To Owner	% To Upstream Lands
8	1+379.45	590-01000	Detroit River Tunnel Company	48%	52%
9	1+544.07	550-07900	1078398 Ontario Ltd.	100%	0%
3	1+854.00	550-01500	SGM Real Estate Holdings ULC	65%	35%
4	1+909.53	550-01600	Adine Builders Ltd.	67%	33%
5	1+957.37	550-02000	Gail Rodzik and Pamela Rodzik	100%	0%
6	2+034.01	550-02100	Gail Rodzik and Pamela Rodzik	71%	29%
7	2+054.59	---	Town of Tecumseh	100%	0%

The cost to supply and install gabion stone erosion protection to prevent drain bank erosion shall be assessed 100% as Special Benefit to the adjacent lands.

Item No. 14 described in the Section 13.0 Estimate of Cost was completed prior to adoption of this report to alleviate flooding issues on the lands with Roll No. 550-18800; however, it was not assessed. We would recommend that 100% of the cost of Item No. 14 including incidental fees be assessed to the lands with Roll No. 550-18800 as Special Benefit.

Should any portion of the enclosed drain between Station 2+386.6 and Station 2+848.8 fail during cleaning, the cost to repair or replace the deficient section shall be assessed to the upstream lands and roads as Outlet.

15.0 Maintenance

We would recommend that the areas described in Section 11.0 of this report, and as listed below, be used to access the drain during works of maintenance:

Between Station 0+000 and Station 0+028: The Contractor shall utilize an area measuring approximately 9.0 metres wide along the west side of the drain.

Between Station 1+321 and Station 1+825: The Contractor shall utilize an area measuring approximately 9.0 metres wide along the west side of the drain.

Between Station 1+825 and Station 2+042: The Contractor shall utilize the Moynahan Street right-of-way.

Between Station 2+042 and Station 2+386.61: The Contractor shall utilize an area measuring 9.0 metres wide along the west side of the drain.

Between Station 2+386.61 and Station 2+848.8: The Contractor shall utilize the North

Talbot Road right-of-way.

We would recommend that future maintenance costs be assessed to the affected properties in accordance with the following provisions and accompanying Maintenance Schedule of Assessment.

The Maintenance Schedule of Assessment has been developed based on an assumed maintenance cost of $10,000. This amount is arbitrary and does not represent the actual costs to be assessed. Actual costs for future maintenance works, including all engineering and incidental costs, shall be assessed against the affected lands and roads in the same proportions as those shown in the attached Maintenance Schedule of Assessment.

Should an existing access culvert require replacement, we would recommend that the cost to replace the culvert be assessed to the benefitting landowner and the upstream lands and roads in accordance with the percentages listed in Table 2. Maintenance Cost Sharing for Access Culverts and Crossings over the 7th Concession Drain, below. The percentage to be shared with the upstream lands and roads shall be assessed as outlet against those lands.

Table 2. Maintenance Cost Sharing for Access Culverts and Crossings over the 7th Concession Drain

Culvert No.	Station	Roll Number	Owner	% To Owner	% To Upstream Lands
8	1+379.45	590-01000	Detroit River Tunnel Company	48%	52%
9	1+544.07	550-07900	1078398 Ontario Ltd.	54%	46%
3	1+854.00	550-01500	SGM Real Estate Holings ULC	65%	35%
4	1+909.53	550-01600	Adine Builders Ltd.	67%	33%
5	1+957.37	550-02000	Gail Rodzik and Pamela Rodzik	69%	31%
6	2+034.01	550-02100	Gail Rodzik and Pamela Rodzik	71%	29%
7	2+054.59	---	Town of Tecumseh	100%	0%

The cost to supply and install gabion stone erosion protection to prevent drain bank erosion shall be assessed 100% as Special Benefit to the adjacent lands.

All future maintenance works between Station 0+000 and Station 0+028 shall be assessed 100% to the lands with Roll No. 550-18800.

Should any portion of the enclosed drain between Station 2+386.6 and Station 2+848.8 fail, the cost to repair or replace the deficient section shall be assessed to the upstream lands and roads as Outlet.

16.0 Grant

In accordance with the Agricultural Drainage Infrastructure Program (ADIP) and the provisions of Sections 85, 86 and 87 of the Act, a 33-1/3% grant is not available for the proposed works, as the Municipal Property Assessment Corporation identifies no assessed lands as having Farm Property Tax Class Rate.

All of which is respectfully submitted by:

BAIRD AE
27 PRINCESS STREET, UNIT 102
LEAMINGTON, ONTARIO
N8H 2X8

Don Joudrey, P. Eng.

APPENDIX A

RECORD OF SITE MEETING

7TH CONCESSION DRAIN AND EXTENSION
SUMMARY OF ENGINEERING ON-SITE MEETING

August 27, 2014 @ 9:00 am
NORTH OF 3525 DEL DUCA DRIVE

ATTENDEES	Description
Greg Scott	Tregaskiss
Ray Little	Calframax Technologies Inc.
Joel Fillion	Morton's Wholesale
Sam Paglia, EI	Drainage Superintendent, Town of Tecumseh
Anna Godo, P.Eng.	Drainage Superintendent, City of Windsor
Halliday Pearson, P.Eng	Crozier Baird Engineers
Ryan Langlois, EI	Crozier Baird Engineers

Sam Paglia - Introduced Engineers and explained issues observed with the drain by Town employees and businesses within the area.

Halliday Pearson– Explained that drain would be surveyed from the upper end near Walker Road to the 401. Survey data will be used to analyze the function of the drain and to determine the works required to return the drain to its original design and to improve function. A draft report will be prepared describing the proposed works, cost estimate of those works and a schedule of assessment. The schedule of assessment will describe the estimated assessments to be levied against the lands that use the drain. A Pre-Consideration Meeting will be held at Tecumseh Town Hall so that affected landowners may ask questions of the Engineer and the Drainage Superintendent. All affected landowners are encouraged to attend. The report will be finalized based on comments received at the Pre-Consideration Meeting then sent to all affected landowners along with an invitation to attend the Consideration Meeting held before Council. Technical aspects of the report are discussed at the Consideration Meeting. Should Council provisionally adopt the report, a Court of Revision would be scheduled within 30 days. Concerns or questions regarding assessments will be addressed at this meeting. Upon final adoption of the by-law, the project will be tendered and construction undertaken. Construction will likely begin in early fall of 2015.

Halliday Pearson – Please describe any issues related to the drain that you have experience.

Ray Little – Our parking lot floods. A pond was filled in on the west side of the drain – would that have anything to do with our flooding?

Halliday Pearson – The pond may, however, it is not identified as part of the Municipal Drain. By cleaning the drain (excavating sediment, brushing and grubbing vegetation), the drain will better convey water from the site. The intent is to alleviate flooding issues by restoring the drain to its original design.

Anna Godo – A portion of the 7th Concession Drain at the 401 was lowered under a previous report. Will you take advantage of the lowering of the drain?

Halliday Pearson – As part of our survey and design, we will consider lowering the drain if that would be advantageous and provide improved drainage for the affected lands.

Sam Paglia – Landowners have brought to my attention drainage issues along County Road 46. It may be necessary to establish a branch of the 7th Concession Drain and Extension to solve their drainage issues. We can discuss this as the design proceeds.

Greg Scott – We have an issue with drainage in our parking lot along North Talbot Road. The catchbasins were recently cleaned of sediment.

Sam Paglia – This parking lot may have been designed to contain the water and direct it to onsite catchbasins as part of the stormwater management design. After cleaning of the drain, the water may still sit onsite but it will drain away faster – water may sit for one day instead of two.

Greg Scott – Will North Talbot Road be dug up again as part of these works?

Sam Paglia – The working area will be specified in the report. Typically, only dump trucks and an excavator are used for drainage works. Accesses may be obstructed temporarily but major delays are not expected.

Greg Scott – How are assessments determined?

Sam Paglia – Assessments are determined based on the volume and rate of flow entering the drain from each parcel. A parcel's location on the drain also affected their assessment.

Joel Fillion – Morton Wholesale's parcel does not experience flooding.

Sam Paglia – It was noted that the drain has been enclosed along North Talbot Road. Our records do not reflect this change – the current drainage report shows an open drain in this area. The Engineer will examine the pipe to determine if they have been sized appropriately and will incorporate this enclosure into the report.

The meeting was adjourned at 9:40am.

CONSTRUCTION SCHEDULE OF ASSESSMENT
7TH CONCESSION DRAIN
TOWN OF TECUMSEH
PROJECT REFERENCE 14-105

February 7, 2017

COUNTY LANDS:

Description	Area Owned (Acres)	Area Owned (Ha.)	Area Affected (Acres)	Area Affected (Ha.)	Owner	Special Benefit	Benefit	Outlet	Total Assessment
Walker Road	---	---	0.02	0.01	The County of Essex	$ -	$ -	$ 35.00	$ 35.00
Total on Municipal Lands						$ -	$ -	$ 35.00	$ 35.00

MUNICIPAL LANDS:

Description	Area Owned (Acres)	Area Owned (Ha.)	Area Affected (Acres)	Area Affected (Ha.)	Owner	Special Benefit	Benefit	Outlet	Total Assessment
North Talbot Road	---	---	1.14	0.46	The Town of Tecumseh	$ -	$ 960.00	$ 1,535.00	$ 2,495.00
Henin Street	---	---	1.25	0.51	The Town of Tecumseh	$ -	$ -	$ 1,220.00	$ 1,220.00
Moynahan Street	---	---	1.78	0.72	The Town of Tecumseh	$ 19,500.00	$ 1,500.00	$ 1,350.00	$ 22,350.00
Regal Drive	---	---	0.35	0.14	The Town of Tecumseh	$ -	$ -	$ 430.00	$ 430.00
DelDuca Drive	---	---	0.40	0.16	The Town of Tecumseh	$ -	$ -	$ 175.00	$ 175.00
O'Neil Drive	---	---	1.61	0.65	The Town of Tecumseh	$ -	$ -	$ 780.00	$ 780.00
590-01200 7 N PT LT 12	3.56	1.44	1.16	0.47	Town of Tecumseh	$ -	$ 815.00	$ 270.00	$ 1,085.00
Total on Municipal Lands						$ 19,500.00	$ 3,275.00	$ 5,760.00	$ 28,535.00

PRIVATELY OWNED NON-AGRICULTURAL LANDS:

Roll No.	Con.	Description	Area Owned (Acres)	Area Owned (Ha.)	Area Affected (Acres)	Area Affected (Ha.)	Owner	Special Benefit	Benefit	Outlet	Total Assessment
550-03200	7	N PT LT 11	2.45	0.99	2.45	0.99	Morton Wholesale Ltd. (Corporation)	$ -	$ 1,720.00	$ 3,090.00	$ 4,810.00
550-03102	7	PT LTS 11	4.89	1.98	4.89	1.98	ITW Canada Management Company	$ -	$ 3,440.00	$ 4,225.00	$ 7,665.00
550-03101	7	PT LT 11	1.67	0.68	1.67	0.68	Generation Development Contractors Inc.	$ -	$ 1,175.00	$ 2,210.00	$ 3,385.00
550-03100	7	GORE 11	3.12	1.26	3.12	1.26	Daniela Calsavara	$ -	$ 2,195.00	$ 3,780.00	$ 5,975.00
550-02902	7	PT LT 11	3.32	1.35	3.32	1.35	Morbella Holdings Ltd.	$ -	$ 2,340.00	$ 3,935.00	$ 6,275.00
550-02900	7	PT LT 11	0.77	0.31	0.77	0.31	Bolzano Tool & Die Company Ltd.	$ -	$ 540.00	$ 915.00	$ 1,455.00
550-02700	7	W PT LT 11	2.35	0.95	2.35	0.95	Fraven Management Ltd.	$ -	$ 1,650.00	$ 2,505.00	$ 4,155.00
550-02600	7	PT LT 11	0.59	0.24	0.59	0.24	Fraven Management Ltd.	$ -	$ 415.00	$ 625.00	$ 1,040.00
550-02500	7	PT LT 12	0.73	0.30	0.73	0.30	ARC Boiler Repair (1983) Ltd.	$ -	$ 515.00	$ 760.00	$ 1,275.00
550-02401	7	PT LT 12	1.39	0.56	1.39	0.56	T.C.T.T. Investment Corporation	$ -	$ 980.00	$ 1,465.00	$ 2,445.00
550-02400	7	PT LT 12	1.40	0.57	1.40	0.57	Grande Line Estates Ltd.	$ -	$ 985.00	$ 1,460.00	$ 2,445.00
550-02300	7	PT LT 12	13.62	5.51	13.73	5.51	1147048 Ontario Ltd.	$ -	$ 9,585.00	$ 14,530.00	$ 24,115.00
550-02100	7	PT LT 12	1.95	0.79	1.95	0.79	Gail Rodzik and Pamela Rodzik	$ 18,450.00	$ 1,375.00	$ 2,020.00	$ 21,845.00
550-02000	7	PT LT 12	1.95	0.79	1.95	0.79	Gail Rodzik and Pamela Rodzik	$ 25,775.00	$ 1,375.00	$ 1,755.00	$ 28,905.00
550-01600	7	PT LT 12	1.47	0.59	1.47	0.59	Adine Builders Ltd.	$ 17,515.00	$ 1,035.00	$ 1,205.00	$ 19,755.00
550-01500	7	PT LT 12	2.47	1.00	2.47	1.00	SGM Real Estate Holdings ULC	$ 22,470.00	$ 1,740.00	$ 1,210.00	$ 25,420.00
550-01400	7	PT LT 12	1.15	0.46	1.15	0.46	Electra-Tech Manufacturing Inc.	$ -	$ -	$ 745.00	$ 745.00
550-01300	7	PT LT 12	1.15	0.47	1.15	0.47	1061175 Ontario Ltd.	$ -	$ -	$ 750.00	$ 750.00
550-01200	7	PT LT 12	1.14	0.46	1.14	0.46	Sernacon Holdings Inc.	$ -	$ -	$ 750.00	$ 750.00
550-01101	7	PT LT 11	0.74	0.30	0.74	0.30	Peter Macera	$ -	$ -	$ 485.00	$ 485.00
550-01100	7	PT LT 11	0.96	0.39	0.96	0.39	TJ Watson Land Development Inc.	$ -	$ -	$ 625.00	$ 625.00
550-01000	7	PT LT 11	0.97	0.39	0.97	0.39	Fraven Management Ltd.	$ -	$ -	$ 635.00	$ 635.00
550-00900	7	PT LT 11	1.90	0.77	1.90	0.77	Generation Development Contractors Inc.	$ -	$ -	$ 765.00	$ 765.00
550-00320	7	PT LT 12	2.17	0.88	2.17	0.88	Timothy Capital Corp.	$ -	$ -	$ 875.00	$ 875.00
550-00318	7	PT LT 12	2.26	0.91	2.26	0.91	Linda Jahn and Cheryl Jahn	$ -	$ -	$ 910.00	$ 910.00
550-00314	7	PT LT 12	4.22	1.71	4.22	1.71	Hero's Fountain Ltd.	$ -	$ 2,970.00	$ 1,645.00	$ 4,615.00
550-20188	7	PT LT 12	1.54	0.62	1.54	0.62	Hero's Fountain Ltd.	$ -	$ -	$ 560.00	$ 560.00
550-20186	7	PT LT 4 & 5	1.11	0.45	1.11	0.45	2376238 Ontario Ltd.	$ -	$ 780.00	$ 410.00	$ 1,190.00
550-07900	7	N PT LT 12	32.75	13.26	32.75	13.26	1078398 Ontario Ltd.	$ 43,785.00	$ 23,045.00	$ 11,955.00	$ 78,785.00
550-07950	7	PT LT 13	15.05	6.09	15.05	6.09	803102 Ontario Ltd.	$ -	$ -	$ 4,995.00	$ 4,995.00
550-20025	7	PT LT 12	1.67	0.68	1.67	0.68	Paul Cesidio DiGiovanni	$ -	$ 1,175.00	$ 590.00	$ 1,765.00
550-20023	7	PT LT 12	1.09	0.44	1.09	0.44	Paul Cesidio DiGiovanni	$ -	$ -	$ 380.00	$ 380.00

PRIVATELY OWNED NON-AGRICULTURAL LANDS:

Roll No.	Con.	Description	Area Owned (Acres)	Area Owned (Ha.)	Area Affected (Acres)	Area Affected (Ha.)	Owner	Special Benefit	Benefit	Outlet	Total Assessment
550-20022	7	PT LT 12	1.00	0.40	1.00	0.40	Paul Cesidio DiGiovanni	$ -	$ -	$ 350.00	$ 350.00
550-20021	7	PT LT 12	1.00	0.40	1.00	0.40	Calframax Holdings Inc.	$ -	$ -	$ 350.00	$ 350.00
550-18800	7	S PT LT 13	2.47	1.00	2.47	1.00	905364 Ontario Ltd.	$ 760.00	$ 1,740.00	$ 580.00	$ 3,080.00
550-18900	7	N PT LT 12	2.01	0.81	2.01	0.81	401 Mack Ltd.	$ -	$ -	$ 470.00	$ 470.00
550-00309	7	PT LT 12	1.08	0.44	1.08	0.44	Filippo Liburdi	$ -	$ -	$ 435.00	$ 435.00
550-00308	7	PT LT 12	1.15	0.47	1.15	0.47	K.F.J. Holdings Ltd.	$ -	$ -	$ 465.00	$ 465.00
550-00307	7	PT LT 12	1.15	0.47	1.15	0.47	Linda Jahn and Cheryl Jahn	$ -	$ -	$ 465.00	$ 465.00
550-00306	7	PT LT 12	1.15	0.47	1.15	0.47	997103 Ontario Ltd.	$ -	$ -	$ 465.00	$ 465.00
550-00305	7	PT LT 12	1.15	0.47	1.15	0.47	KBC Tools Inc.	$ -	$ -	$ 465.00	$ 465.00
550-00304	7	PT LT 12	0.98	0.40	0.98	0.40	Greycliffe Consultants	$ -	$ -	$ 395.00	$ 395.00
550-07975	7	PT LT 12 & 13	2.87	1.16	2.87	1.16	1233831 Ontario Inc.	$ -	$ -	$ 1,530.00	$ 1,530.00
590-01000	7	PT LT 10-12	---	---	5.16	2.09	Detroit River Tunnel Company	$ 11,675.00	$ 3,635.00	$ 1,515.00	$ 16,825.00
								==========	==========	==========	=========
Total on Privately Owned Non-Agricultural Lands ----------								$140,430.00	$64,410.00	$ 80,250.00	$285,090.00
								==========	==========	==========	=========
TOTAL ASSESSMENT ----------								$159,930.00	$67,685.00	$ 86,045.00	$313,660.00
								==========	==========	==========	=========

Total Area Assessed 143.01 acres
57.83 hectares

SPECIAL BENEFIT ASSESSMENTS
7TH CONCESSION DRAIN
TOWN OF TECUMSEH
PROJECT REFERENCE 14-105

MUNICIPAL LANDS:

Description	Area Owned (Acres)	Area Owned (Ha.)	Area Affected (Acres)	Area Affected (Ha.)	Owner	Culverts	Road Crossings	Total Assessment
Moynahan Street	---	---	1.78	0.72	The Town of Tecumseh	$ -	$ 19,500.00	$ 19,500.00
						==========	==========	=========
Total on Municipal Lands	----------					$ -	$ 19,500.00	$ 19,500.00

PRIVATELY OWNED NON-AGRICULTURAL LANDS:

Roll No.	Con.	Description	Area Owned (Acres)	Area Owned (Ha.)	Area Affected (Acres)	Area Affected (Ha.)	Owner	Culverts	Excavation	Total Assessment
550-02100	7	PT LT 12	1.95	0.79	1.95	0.79	Gail Rodzik & Pamela Rodzik	$ 18,450.00	$ -	$ 18,450.00
550-02000	7	PT LT 12	1.95	0.79	1.95	0.79	Gail Rodzik & Pamela Rodzik	$ 25,775.00	$ -	$ 25,775.00
550-01600	7	PT LT 12	1.47	0.59	1.47	0.59	Adine Builders Ltd.	$ 17,515.00	$ -	$ 17,515.00
550-01500	7	PT LT 12	2.47	1.00	2.47	1.00	SGM Real Estate Holdings ULC	$ 22,470.00	$ -	$ 22,470.00
550-18800	7	S PT LT 13	2.47	1.00	2.47	1.00	905364 Ontario Ltd.	$ -	$ 760.00	$ 760.00
550-07900	7	N PT LT 12	32.75	13.26	32.75	13.26	1078398 Ontario Ltd.	$ 43,785.00	$ -	$ 43,785.00
590-01000	7	PT LT 10-12	---	---	5.16	2.09	Detroit River Tunnel Company	$ 11,675.00	$ -	$ 11,675.00
								==========	==========	=========
Total on Privately Owned Non-Agricultural Lands----------								$139,670.00	$ 760.00	$ 140,430.00
								==========	==========	=========
TOTAL ASSESSMENT			----------					$139,670.00	$ 20,260.00	$ 159,930.00
								==========	==========	=========

MAINTENANCE SCHEDULE OF ASSESSMENT
7TH CONCESSION DRAIN
TOWN OF TECUMSEH
PROJECT REFERENCE 14-105

February 7, 2017

COUNTY LANDS:

Description	Area Owned (Acres)	Area Owned (Ha.)	Area Affected (Acres)	Area Affected (Ha.)	Owner	Benefit	Outlet	Total Assessment
Walker Road	---	---	0.02	0.01	The County of Essex	$ -	$ 5.00	$ 5.00
Total on Municipal Lands						$ -	$ 5.00	$ 5.00

MUNICIPAL LANDS:

Description	Area Owned (Acres)	Area Owned (Ha.)	Area Affected (Acres)	Area Affected (Ha.)	Owner	Benefit	Outlet	Total Assessment
North Talbot Road	---	---	1.14	0.46	The Town of Tecumseh	$ 85.00	$ 50.00	$ 135.00
Henin Street	---	---	1.25	0.51	The Town of Tecumseh	$ -	$ 40.00	$ 40.00
Moynahan Street	---	---	1.78	0.72	The Town of Tecumseh	$ 140.00	$ 60.00	$ 200.00
Regal Drive	---	---	0.35	0.14	The Town of Tecumseh	$ -	$ 10.00	$ 10.00
DelDuca Drive	---	---	0.40	0.16	The Town of Tecumseh	$ -	$ 10.00	$ 10.00
O'Neil Drive	---	---	1.61	0.65	The Town of Tecumseh	$ -	$ 50.00	$ 50.00
590-01200 7 N PT LT 12	3.56	1.44	1.16	0.47	Town of Tecumseh	$ 70.00	$ 25.00	$ 95.00
Total on Municipal Lands						$ 295.00	$ 245.00	$ 540.00

PRIVATELY OWNED NON-AGRICULTURAL LANDS:

Roll No.	Con.	Description	Area Owned (Acres)	Area Owned (Ha.)	Area Affected (Acres)	Area Affected (Ha.)	Owner	Benefit	Outlet	Total Assessment
550-03200	7	N PT LT 11	2.45	0.99	2.45	0.99	Morton Wholesale Ltd. (Corporation)	$ 155.00	$ 100.00	$ 255.00
550-03102	7	PT LTS 11	4.89	1.98	4.89	1.98	ITW Canada Management Company	$ 305.00	$ 195.00	$ 500.00
550-03101	7	PT LT 11	1.67	0.68	1.67	0.68	Generation Development Contractors Inc.	$ 105.00	$ 65.00	$ 170.00
550-03100	7	GORE 11	3.12	1.26	3.12	1.26	Daniela Calsavara	$ 195.00	$ 120.00	$ 315.00
550-02902	7	PT LT 11	3.32	1.35	3.32	1.35	Morbella Holdings Ltd.	$ 205.00	$ 120.00	$ 325.00
550-02900	7	PT LT 11	0.77	0.31	0.77	0.31	Bolzano Tool & Die Company Ltd.	$ 50.00	$ 25.00	$ 75.00
550-02700	7	W PT LT 11	2.35	0.95	2.35	0.95	Fraven Management Ltd.	$ 145.00	$ 80.00	$ 225.00
550-02600	7	PT LT 11	0.59	0.24	0.59	0.24	Fraven Management Ltd.	$ 35.00	$ 20.00	$ 55.00
550-02500	7	PT LT 12	0.73	0.30	0.73	0.30	ARC Boiler Repair (1983) Ltd.	$ 45.00	$ 25.00	$ 70.00
550-02401	7	PT LT 12	1.39	0.56	1.39	0.56	T.C.T.T. Investment Corp	$ 85.00	$ 45.00	$ 130.00
550-02400	7	PT LT 12	1.40	0.57	1.40	0.57	Grande Line Estates Ltd.	$ 85.00	$ 45.00	$ 130.00
550-02300	7	PT LT 12	13.62	5.51	13.73	5.51	1147048 Ontario Ltd.	$ 850.00	$ 455.00	$ 1,305.00
550-02100	7	PT LT 12	1.95	0.79	1.95	0.79	Gail Rodzik and Pamela Rodzik	$ 120.00	$ 60.00	$ 180.00
550-02000	7	PT LT 12	1.95	0.79	1.95	0.79	Gail Rodzik and Pamela Rodzik	$ 120.00	$ 60.00	$ 180.00
550-01600	7	PT LT 12	1.47	0.59	1.47	0.59	Adine Builders Ltd.	$ 90.00	$ 45.00	$ 135.00
550-01500	7	PT LT 12	2.47	1.00	2.47	1.00	SGM Real Estate Holdings ULC	$ 155.00	$ 70.00	$ 225.00
550-01400	7	PT LT 12	1.15	0.46	1.15	0.46	Electra-Tech Manufacturing Inc.	$ -	$ 35.00	$ 35.00
550-01300	7	PT LT 12	1.15	0.47	1.15	0.47	1061175 Ontario Ltd.	$ -	$ 35.00	$ 35.00
550-01200	7	PT LT 12	1.14	0.46	1.14	0.46	Sernacon Holdings Inc.	$ -	$ 35.00	$ 35.00
550-01101	7	PT LT 11	0.74	0.30	0.74	0.30	Peter Macera	$ -	$ 20.00	$ 20.00
550-01100	7	PT LT 11	0.96	0.39	0.96	0.39	TJ Watson Land Development Inc.	$ -	$ 30.00	$ 30.00
550-01000	7	PT LT 11	0.97	0.39	0.97	0.39	Fraven Management Ltd.	$ -	$ 30.00	$ 30.00
550-00900	7	PT LT 11	1.90	0.77	1.90	0.77	Generation Development Contractors Inc.	$ -	$ 55.00	$ 55.00
550-00320	7	PT LT 12	2.17	0.88	2.17	0.88	Timothy Capital Corp.	$ -	$ 60.00	$ 60.00
550-00318	7	PT LT 12	2.26	0.91	2.26	0.91	Linda Jahn and Cheryl Jahn	$ -	$ 60.00	$ 60.00
550-00314	7	PT LT 12	4.22	1.71	4.22	1.71	Hero's Fountain Ltd.	$ 265.00	$ 110.00	$ 375.00
550-20188	7	PT LT 12	1.54	0.62	1.54	0.62	Hero's Fountain Ltd.	$ -	$ 40.00	$ 40.00
550-20186	7	PT LT 4 & 5	1.11	0.45	1.11	0.45	2376238 Ontario Ltd.	$ 70.00	$ 25.00	$ 95.00
550-07900	7	N PT LT 12	32.75	13.26	32.75	13.26	1078398 Ontario Ltd.	$ 2,045.00	$ 775.00	$ 2,820.00

PRIVATELY OWNED NON-AGRICULTURAL LANDS:

Roll No.	Con.	Description	Area Owned (Acres)	Area Owned (Ha.)	Area Affected (Acres)	Area Affected (Ha.)	Owner	Benefit	Outlet	Total Assessment
550-07950	7	PT LT 13	15.05	6.09	15.05	6.09	803102 Ontario Ltd.	$ -	$ 310.00	$ 310.00
550-20025	7	PT LT 12	1.67	0.68	1.67	0.68	Paul Cesidio DiGiovanni	$ 105.00	$ 40.00	$ 145.00
550-20023	7	PT LT 12	1.09	0.44	1.09	0.44	Paul Cesidio DiGiovanni	$ -	$ 25.00	$ 25.00
550-20022	7	PT LT 12	1.00	0.40	1.00	0.40	Paul Cesidio DiGiovanni	$ -	$ 25.00	$ 25.00
550-20021	7	PT LT 12	1.00	0.40	1.00	0.40	Calframax Holdings Inc.	$ -	$ 25.00	$ 25.00
550-18800	7	S PT LT 13	2.47	1.00	2.47	1.00	905364 Ontario Ltd.	$ 155.00	$ 50.00	$ 205.00
550-18900	7	N PT LT 12	2.01	0.81	2.01	0.81	401 Mack Ltd.	$ -	$ 40.00	$ 40.00
550-00309	7	PT LT 12	1.08	0.44	1.08	0.44	Filippo Liburdi Construction	$ -	$ 30.00	$ 30.00
550-00308	7	PT LT 12	1.15	0.47	1.15	0.47	K.F.J. Holdings Ltd.	$ -	$ 30.00	$ 30.00
550-00307	7	PT LT 12	1.15	0.47	1.15	0.47	Linda Jahn and Cheryl Jahn	$ -	$ 30.00	$ 30.00
550-00306	7	PT LT 12	1.15	0.47	1.15	0.47	997103 Ontario Ltd.	$ -	$ 30.00	$ 30.00
550-00305	7	PT LT 12	1.15	0.47	1.15	0.47	KBC Tools Inc.	$ -	$ 30.00	$ 30.00
550-00304	7	PT LT 12	0.98	0.40	0.98	0.40	Greycliffe Consultants	$ -	$ 25.00	$ 25.00
550-07975	7	PT LT 12 & 13	2.87	1.16	2.87	1.16	1233831 Ontario Inc.	$ -	$ 110.00	$ 110.00
590-01000	7	PT LT 10-12	---	---	5.16	2.09	Detroit River Tunnel Company	$ 320.00	$ 110.00	$ 430.00
								==========	==========	=========
Total on Privately Owned Non-Agricultural Lands ----------								$ 5,705.00	$ 3,750.00	$ 9,455.00
								==========	==========	=========
TOTAL ASSESSMENT ----------								$ 6,000.00	$ 4,000.00	$ 10,000.00
								==========	==========	=========

Total Area Assessed 143.01 acres
57.83 hectares

SPECIFICATIONS
REPLACEMENT ACCESS CULVERTS
OVER THE 7TH CONCESSION DRAIN
TOWN OF TECUMSEH
PROJECT NO. 14-105

1.0 PIPE MATERIAL

The Contractor shall supply and install or clean the following:

Access Culverts and Crossings:

a. Culvert No. 8 at Station 1+379: 16.0 metres of metres 1800mm diameter aluminized corrugated steel pipe, 2.8mm thick with 125 x 25mm corrugations and sloped gabion stone end of pipe protection;
b. Culvert No. 9 at Station 1+544: 20.0 metres of new 1800mm diameter class 65-D concrete pipe and sloped gabion stone end of pipe protection;
c. Culvert No. 3 at Station 1+854: 22.0 metres of new 1200mm diameter aluminized corrugated steel pipe, 2.8mm thick with 68 x 13mm corrugations and concrete block headwalls;
d. Culvert No. 4 at Station 1+909: 12.5 metres of new 1200mm diameter aluminized corrugated steel pipe, 2.8mm thick with 68 x 13mm corrugations with concrete block headwalls;
e. Culvert No. 5 at Station 1+957: 11.8 metres of new 1200mm diameter aluminized corrugated steel pipe, 2.8mm thick with 68 x 13mm corrugations with concrete block headwalls;
f. Culvert No. 6 at Station 2+034: 12.2 metres of new 1200mm diameter aluminized corrugated steel pipe, 2.8mm thick with 68 x 13mm corrugations with concrete block headwalls;
g. Culvert No. 7 at Station 2+054: 12.5 metres of 1050mm diameter class 65-D concrete pipe with concrete block headwalls.

Existing enclosed pipe network to be cleaned:

a. Station 2+386.6 to Station 2+848.8: Clean existing 450mm to 825mm diameter corrugated steel pipes including all inline manholes and catch basins.

2.0 WORKING AREA

The areas available to the Contractor to be used for the purpose of constructing the recommended works of this report and for construction and future maintenance as provided for under Section 63 of the Act are described follows:

Between Station 0+000 and Station 0+028: The Contractor shall utilize an area measuring approximately 9.0 metres wide along the west side of the drain.

Between Station 1+321 and Station 1+825: The Contractor shall utilize an area measuring 9.0 metres wide along the west side of the drain.

Between Station 1+825 and Station 2+042: The Contractor shall utilize the Moynahan Street right-of-way.

Between Station 2+042 and Station 2+386.61: The Contractor shall utilize an area measuring 9.0 metres wide along the west side of the drain.

Between Station 2+386.61 and Station 2+848.8: The Contractor shall utilize the North Talbot Road right-of-way.

3.0 DISPOSAL OF EXCAVATED MATERIAL

The Contractor shall dispose of excavated material as described below:

The Contractor shall spread and level excavate adjacent to the drain to a maximum depth of 300mm between:

Station 1+321and Station 1+750
Station 2+054 and Station 2+386.6

The Contractor shall load, haul, spread and level excavate on lands adjacent to Station 1+404 and Station 1+750 and Station 2+069 and Station 2+386.61 between:

Station 1+750 and Station 1+825
Station 1+825 and Station 2+054.

4.0 LOCATION AND ELEVATION OF CULVERT

The location and elevations of the new culvert shall be according to the drawings, 14-105 Sheet 1 to Sheet 7.

5.0 PLACEMENT OF CULVERT

a) The Contractor shall excavate all vegetation, topsoil and existing granular material from the bank slopes and bottom of the existing drain complete along with hauling materials off site.

   The required work includes:

   i. The supply and installation of new pipe as described in Section 1.0 Pipe Material;

b) The Contractor shall perform the excavation, placement of the pipe and backfill in a dry condition and shall provide all required pumps and/or equipment to enable the work to proceed in the dry.

c) Supply and place sloped gabion stone end of pipe protection or concrete block headwalls, as required.

6.0 PIPE BACKFILL

After the pipe has been set, the Contractor shall backfill the culvert with granular "B" material, O.P.S.S. Spec 1010 according to the attached plan. The backfill material shall be carefully placed so damage to or movement of the culvert is avoided and backfill materials shall be placed in layers not exceeding 300 mm in thickness, loose measurement. Each layer shall be thoroughly compacted in place to a Standard Proctor Density of 98% by means of mechanical compactors. The equipment and method of compacting the backfill material shall be to the full satisfaction of the Commissioner in charge.

7.0 QUARRIED ROCK END PROTECTION

Where specified and after the corrugated plastic pipe has been set and backfilled the Contractor shall install quarried rock erosion protection at each end of the pipe.

The backfill over the ends of the corrugated plastic pipe shall be set on a slope of 1½ metres horizontal to 1 metre vertical from the bottom of the corrugated plastic pipe to the top of each side slope and between both side slopes.

7.0 QUARRIED ROCK END PROTECTION - Continued

The top 300 mm in thickness of the backfill over the ends of the corrugated plastic pipe shall be quarried rock. The quarried rock shall be placed on a slope of 1½ metres horizontal to 1 metre vertical from the bottom of the corrugated plastic pipe to the top of each side slope of the drain and between both side slopes. The quarried rock shall have a minimum dimension of 100 mm and a maximum dimension of 225 mm. Prior to placing quarried rock end protection over the granular material, the Contractor shall lay a non woven geotextile filter fabric equal to a "Terrafix 270R" or approved equal. The geotextile filter fabric shall extend from the bottom of the corrugated plastic pipe to the top of each side slope of the drain and between both side slopes of the drain. The Contractor shall take extreme care not to damage the geotextile filter fabric when placing the quarried rock on top of the filter fabric. The geotextile filter fabric and quarried rock shall be placed to the complete satisfaction of the Municipality's Drainage Superintendent.

7.0 CONCRETE BLOCK HEADWALLS

Where specified and after the Contractor has set in place the new culvert, he shall completely backfill the same and install new concrete block headwalls at the locations indicated on the drawing. The Contractor shall completely backfill in behind the new concrete block headwalls with granular material, Granular "A" and "B" per O.P.S.S. 1010 and as additionally specified under Special Provisions Item No. 11.0 and the granular material shall be compacted in place with a standard proctor density of 100%. The granular backfill shall be placed and compacted in lifts not to exceed 300 mm (12 inches) in thickness.

Upon completion of the concrete block headwall the Contractor shall cap the top row of concrete blocks with a prefabricated concrete cap. The Contractor shall fill all voids between the concrete blocks and the corrugated steel pipe with concrete, particular care being taken underneath the pipe haunches to fill all voids.

8.0 ALIGNMENT

The alignment of the enclosure throughout shall be to the full satisfaction of the Commissioner in charge. The whole of the work shall be done in a neat, thorough and workmanlike manner to the full satisfaction of the Commissioner in charge.

9.0 LOCATION OF STRUCTURES, ETC.

The Contractor shall satisfy himself as to the exact location, nature and extent of any existing structure, utility or other object that he may encounter during the course of the work. The Contractor shall indemnify and save harmless, the Town and the Engineer for any damages which he may cause or sustain during the progress of the work. He shall not hold the Town or the Engineer liable for any legal action arising out of any claims brought about by such damage caused by him.

Numerous catchbasins were noted in the front portion of numerous properties along the length of the drain. The Contractor shall take care to not damage any catchbasin or connection into the drain. Should a catchbasin or connection be damaged, it shall be replaced by the Contractor at his cost.

10.0 DAMAGE TO TRAVELLED PORTION OF MUNICIPAL ROAD

The Contractor will be responsible for any damage caused by him to any portion of the municipal road system, especially to the travelled portion. When excavation work is being carried out and the excavation equipment is placed on the travelled portion of a road, the travelled portion shall be protected by having the excavation equipment placed on satisfactory timber planks or timber pads. If any parts of the travelled portion of the road is damaged by the Contractor, the Municipality shall

10.0 DAMAGE TO TRAVELLED PORTION OF MUNICIPAL ROAD- Continued

have the right to have the necessary repair work done by its employees and the cost of all labour and materials used to carry out the repair work shall be deducted from the Contractor's contract and credited to the Municipality.

11.0 CONSTRUCTION SAFETY

The Contractor shall comply with all the requirements of the Occupational Health and Safety Act, 1990 and the regulations passed in connection therewith, as administered by the Ontario Ministry of Labour and all subsequent amendments of the said Act.

The Contractor shall exercise all possible precaution against injury to persons or property resulting from his work. The Contractor shall leave no trenches, pits, holes or excavations uncovered, without providing sufficient protection at all times. The Contractor shall install, erect and provide barricades, signs, traffic cones, flashers, lights, plates, warning and other devices, materials and personnel as may be required and at his own expense in order to provide for the safe passage and control of traffic and to ensure public safety. All traffic control shall be in accordance with the latest standards of the Ministry of Transportation.

12.0 CERTIFICATE OF CLEARANCE

The Contractor will be required to submit to the Municipality a Certificate of Good Standing from the Workplace Safety & Insurance Board prior to the commencement of the work and the Contractor will be required to submit to the Municipality, a Certificate of Clearance for the project from the Workplace Safety & Insurance Board before final payment is made to the Contractor.

13.0 PROGRESS ORDERS

Monthly progress orders for payment shall be furnished to the Contractor by the Commissioner in charge; said orders shall not be for more than 90% of the value of the work done and the materials furnished on the site. The paying of the full 90% does not imply that any portion of the work has been accepted. The remaining 10% will be paid 45 days after the final acceptance and completion of the work.

14.0 CLEANING UP

The Contractor shall leave the whole of the site of the work in a neat, thorough and workmanlike appearance to the full satisfaction of the Commissioner. He shall haul away any excess earth from the site. He shall haul to the site, sufficient earth to fill any depressions caused by his work at his own expense. The site shall be left as close as possible in the same condition as it was prior to the commencement of the work.

15.0 MEASUREMENT AND PAYMENT

Payment for the work shall be on a unit price basis unless otherwise indicated and shall include all the work shown on the accompanying drawings and specifications.

16.0 MAINTAINING FLOW

The Contractor shall maintain the flow of any drainage works encountered in the progress of the work and at no expense to the Owner. The Contractor shall obtain written approval from the Commissioner in charge to stop up any drain and if necessary provide pumping equipment, build necessary by-passes, etc. at no expense to the Owner.

17.0 COMMISSIONER

Where the work "Commissioner" is used in this specification, it shall mean the person or persons appointed by the Council of the Municipality having jurisdiction, to superintend the work.

The Commissioner will be permitted to make minor variations in the work so long as these variations will result in a more satisfactory project or a more economical one. These variations, however, must not be such as to change the intent of the work performed nor are they to reduce the standard of quality.

18.0 NOTIFICATION OF WORK

Prior to commencing any work of installing the extension of the culvert or removing any existing structures, the Contractor shall inform the Municipality's Drainage Superintendent of his intent to commence work at least 48 hours prior to commencing any work. The Owner or Contractor shall endeavour to install and complete the new structure without delay once he has commenced the work. If for any reason the work does not proceed continuously then the Owner or Contractor shall notify the Drainage Superintendent in advance of any backfilling operation or headwall construction so that he may schedule inspection of same. The completed work must be done to the satisfaction of the Municipality's Drainage Superintendent and be approved by him.

19.0 MAINTENANCE

The Contractor shall repair and make good at his expense any damages or faults in the work that may appear within one year after its completion (as evidenced by the final inspection report), as the result of imperfect or defective work done or materials furnished. Nothing herein contained shall be construed as any way restricting or limiting the liability of the Contractor under the appropriate laws under which the work is being done.

20.0 PROPERTY BARS

The Contractor shall note the presence of numerous iron property bars along the course of the work. The Contractor shall make every effort to protect all property bars. The cost of replacing any property bar destroyed by the Contractor will be paid by the Contractor.

21.0 PROVISIONAL ITEMS

Items of work included in the Form of Tender noted as "Provisional" may be deleted from the Contract at any time at the discretion of the Owner. If any Provisional Item, or part thereof, is deleted from the requirements of the Contract, the Contractor will have no claim against eh Owner for so doing and the Contractor must take this requirement into consideration when determining his unit prices and his Total Tender Price.

Provisional prices tendered shall be in effect until issuance of the final payment certificate.

SPECIFICATIONS
ENVIRONMENTAL PROTECTION SPECIAL PROVISIONS
FOR THE
7TH CONCESSION DRAIN
TOWN OF TECUMSEH
PROJECT NO. 14-105

1.0 GENERAL

These Environmental Protection Special Provisions shall apply and form part of this Contract. All costs associated to conforming with these Special Provisions shall be included in the Tender prices bid.

2.0 FIRES

Fires and burning of rubbish on site will be permitted only with special approval from the Municipality.

3.0 DISPOSAL OF WASTES

The Contractor shall not bury rubbish and waste materials on site unless approved by the Engineer and all applicable approving authorities. The site shall be maintained free of accumulated waste and rubbish. All waste materials should be disposed of in a legal manner at a site approved by all local approving authorities and the Engineer.

The Contractor shall not allow deleterious substances, waste or volatile materials such as mineral spirits, or paint thinner, to enter into waterways, storm or sanitary sewers.

The disposal of dredge material where applicable shall be in accordance with the above.

4.0 POLLUTION CONTROL

The Contractor shall maintain under this Contract temporary erosion, sediment and pollution control features installed. The Contractor shall control emissions from equipment and plant to local authorities emission requirements. The Contractor shall not cause excessive turbidity when performing in-water work. The Contractor shall not allow any debris, fill or other foreign matter to enter into the waterway. The Contractor shall remove from the waterway, all extraneous materials resulting from in-water work.

The Contractor shall abide by local noise By-Laws for the duration of the Contract.

Spills of deleterious substances into waterways and on land shall be immediately contained by the Contractor and the Contractor shall cleanup in accordance with Provincial regulatory requirements. All spills shall be reported to the Ontario Spills Action Centre (1-800-268-6060), local authorities having jurisdiction and the Engineer. To reduce the risk of fuel entering the waterway, refuelling of machinery must take place a safe distance from the waterway. The Contractor shall note that the Engineer or the Owner takes no responsibility for spills, this shall be the sole responsibility of the Contractor.

5.0 WHMIS

The Contractor shall comply with the requirements of Workplace Hazardous Materials Information System (WHMIS) regarding use, handling, storage and disposal of hazardous materials and regarding labelling and the provision of material safety data sheets acceptable to Labour Canada.

6.0 DRAINAGE

The Contractor shall not pump water containing suspended materials into waterways, sewers or drainage systems. The Contractor shall be solely responsible for the control, disposal or runoff of water containing suspended materials or other harmful substances in accordance with these specifications, and local authority requirements. The Contractor shall provide temporary drainage and pumping as necessary to keep excavations and site free from water.

The Contractor shall install and maintain sediment control devices as indicated on the Contract Drawing and as directed by the Engineer.

7.0 PROTECTION OF VEGETATION

The Contractor shall exercise the utmost caution to ensure that existing trees and plants on-site and on adjacent properties are not damaged or disturbed unless noted otherwise in the Removals Special Provisions of this Contract. The Contractor shall restrict tree removal to areas indicated on the Contract Drawings and/or designated on-site. No trees or shrubs shall be removed without the approval of the Engineer and/or Drainage Superintendent. Mature trees outside of the drain bank limit shall remain undisturbed except where necessary to facilitate the proposed works.

8.0 DUST CONTROL

The Contractor will be solely responsible for controlling dust nuisance resulting from his operations, both on the site and within adjacent right-of-ways.

Water and calcium chloride shall be applied to areas on or adjacent to the site as authorized by the Engineer as being necessary and unavoidable for the prevention of dust nuisance or hazard to the public. No payment will be made for dust control unless otherwise specified in the Special Provisions.

9.0 RESTRICTIONS FOR IN-WATER WORKS

The Contractor shall only perform in-water works during times when conditions permit reasonable production rates to be achieved. The Contractor shall be required to adopt good housekeeping practices that minimize disturbance to the site and the adjacent waterway.

The Contractor shall note that this Project is subject to approval from the Essex Region Conservation Authority and as such, any possible turbidity caused by the construction of the shore protection works is of key importance.

The Contractor shall minimize the turbidity (sedimentation) produced by any in-water works construction or operations. The Contractor will be ordered to cease operations if, in the opinion of the Engineer or authorities having jurisdiction, the in-water work is producing unacceptable amounts of turbidity in the waterway. Based on this, the Contractor shall either adjust his operation(s) to produce lower turbidity levels, wait for more favourable conditions before

9.0 RESTRICTIONS FOR IN-WATER WORKS - Continued

operations will be allowed to continue, or undertake approved mitigating measures (e.g. sediment control, etc.). All costs associated with the above will be the sole responsibility of the Contractor, and no claims for extras or delays will be considered.

10.0 FISH HABITAT

No work shall be undertaken when there is likelihood of adverse effects on fish spawning or fish habitat in downstream waters.

GENERAL SPECIFICATIONS
FOR CONSTRUCTION OF OPEN DRAINS
FOR THE
7TH CONCESSION DRAIN
TOWN OF TECUMSEH
PROJECT NO. 14-105

1.0 EXAMINATION OF SITE, PLANS AND SPECIFICATIONS

Each tenderer must visit the site and review the plans and specifications before submitting his tender and must satisfy himself as to the extent of the work and local conditions to be met during the construction period. He is not to claim at any time after submission of his tender that there was any misunderstanding of the terms and conditions of the contract relating to site conditions. The quantities shown as indicated on the drawings or in the report are estimates only and are for the sole purpose of indicating to the tenderers the general magnitude of the work. The tenderer is responsible for checking quantities for accuracy prior to submitting his tender.

2.0 SUPPLY OF MATERIALS

The Contractor shall supply all labour, equipment and materials necessary for the proper completion of the project.

3.0 PROFILE

The excavation of the drain must be at least to the depth intended by the grade line as shown on the profile, which grade line is governed by the bench marks. The profile shows, for the convenience of the Contractors and others, the approximate depth of cut from the surface of the ground at the points where the numbered stakes are set to the final invert of the channel and also the approximate depth of cut from the bottom of the existing channel to the final invert of the channel. Bench marks which have been established along the course of the drain, shall govern the final elevation of the drain. The location and elevation of the bench marks are shown on the profile.

4.0 ALIGNMENT

The alignment of the drain throughout shall be to the full satisfaction of the Commissioner in charge. The whole of the work shall be done in a neat, thorough and workmanlike manner to the full satisfaction of the Commissioner in charge. The bottom widths and side slopes of the various sections of the finished drain are to be true to line and grade as shown on the profile. When completed the drain shall have a uniform and even bottom and in no case shall such bottom project above the grade line as shown on the accompanying drawing, and as determined from the bench mark.

5.0 BRUSHING AND GRUBBING

Brush or rubbish shall be grubbed out and close cut on the bank of the working side of the drain including the strip of land between where the earth is to be cast and spread and the top of the drain. The brush or rubbish shall be loaded, hauled and disposed of offsite at a location determined by the Contractor and at his expense. All mature trees along the top of the bank of the working side of the drain shall be selectively left standing.

5.0 BRUSHING AND GRUBBING - Continued

Existing select hardwood trees greater than 200 mm (8") in diameter situated in the drain bank within 1.0 metre from the top of the bank may be selectively left standing if the Drainage Superintendent considers the trees will not adversely affect the flow of water within the drain. Prior to removing any trees the Contractor shall meet at the site with the Drainage Superintendent to review if any vegetation or select trees are environmentally significant for preservation.

6.0 DISPOSAL OF MATERIAL

The Contractor shall dispose of excavated material as follows: All excavated material shall be loaded, hauled and disposed of offsite at a location to be determined by him and at his expense.

7.0 SPREADING EXCAVATED EARTH

All excavated material shall be loaded, hauled and disposed of offsite at a location to be determined by him and at his expense. No material shall be cast and spread on the adjacent industrial lands.

7.0 FENCING

Where it is necessary to take down any fence in order to proceed with the work, the same shall be done by the Contractor across or along that portion of the work where such fence is. The Contractor will be required to exercise extreme care in the removal of any fence so as to cause a minimum of damage to the same. The Contractor will be required to replace any fence that is taken down in order to proceed with the work and the fence shall be replaced in a neat and workmanlike manner. The Contractor will not be required to procure any new materials for rebuilding the fence provided he has used reasonable care in the removing and replacing of the same. Where any fence is removed by the Contractor and the Owner thereof deems it advisable and procures new material for replacing the fence so removed, the Contractor shall replace the fence using the new materials and the materials from the present fence shall remain the property of the Owner. The Contractor is not to leave any fences open when he is not at work in the immediate vicinity.

8.0 LOCATION OF STRUCTURES AND UTILITIES

The Contractor shall satisfy himself as to the exact location, nature and extent of any existing structure, utility or other object which he may encounter during the course of the work. The Contractor shall indemnify and save harmless, the Municipality and the Engineer for any damages which he may cause or sustain during the progress of the work. He shall not hold the Municipality or the Engineer liable for any legal action arising out of any claims brought about by such damage caused by him.

9.0 ACCESS CULVERTS AND CROSSINGS

Culverts and crossings shall be cleaned or removed and replaced as described as follows:

Between Station 2+386.6 and Station 2+848.8: All pipes and structures shall be cleaned; all excess material shall be disposed of offsite at a location determined by the contractor at his expense.

Culvert No. 8 at Station 1+379: Culvert shall be removed and replaced as described in

9.0 ACCESS CULVERTS AND CROSSINGS - Continued

Section 1.0 Pipe Material of Specifications – Replacement Access Culverts over the 7th Concession Drain.

Culvert No. 9 at Station 1+544: Culvert shall be supplied and placed as described in Section 1.0 Pipe Material of Specifications – Replacement Access Culverts over the 7th Concession Drain.

Culvert No. 3 at Station 1+854: Culvert shall be removed and replaced as described in Section 1.0 Pipe Material of Specifications – Replacement Access Culverts over the 7th Concession Drain.

Culvert No. 4 at Station 1+909: Culvert shall be removed and replaced as described in Section 1.0 Pipe Material of Specifications – Replacement Access Culverts over the 7th Concession Drain.

Culvert No. 5 at Station 1+957: Culvert shall be removed and replaced as described in Section 1.0 Pipe Material of Specifications – Replacement Access Culverts over the 7th Concession Drain.

Culvert No. 6 at Station 2+034: Culvert shall be removed and replaced as described in Section 1.0 Pipe Material of Specifications – Replacement Access Culverts over the 7th Concession Drain.

Culvert No. 7 at Station 2+054: Culvert shall be removed and replaced as described in Section 1.0 Pipe Material of Specifications – Replacement Access Culverts over the 7th Concession Drain.

10.0 BACKFILL FOR CULVERTS

Where specified and after the corrugated plastic pipe has been set, the Contractor shall backfill the culvert with granular "B" material, O.P.S.S. Spec. 1010. The granular backfill shall be compacted in place to a Standard Proctor Density of 100% by means of mechanical compactors. The equipment and method of compacting the backfill material shall be to the full satisfaction of the Drainage Superintendent or Engineer.

11.0 ROCK PROTECTION FOR CULVERTS

The backfill over the ends of the pipe shall be set on a slope of 1½ metres horizontal to 1 metre vertical from the bottom of the pipe to the top of each side slope and between both side slopes. The top 30 cm in thickness of the backfill over the ends of the pipe shall be quarried rock. The quarried rock shall be placed on a slope of 1½ metres horizontal to 1 metre vertical from the bottom of the pipe to the top of each side slope of the drain and between both side slopes. The quarried rock shall have a minimum dimension of 100 mm and a maximum dimension of 225 mm. Prior to placing quarried rock end protection over the granular material, the Contractor shall lay a non woven geotextile filter fabric equal to a "Terrafix 270R" or approved equal. The geotextile filter fabric shall extend from the bottom of the pipe to the top of each side slope of the drain and between both side slopes of the drain. The Contractor shall take extreme care not to damage the geotextile filter fabric when placing the quarried rock on top of the filter fabric.

12.0 PLACING OF CULVERT PIPE

When specified the Contractor shall install all culvert bridges in the location directed by the Engineer. The excavation for placing the culvert, the type and class of bedding and backfill and culvert end treatment shall be carried out to the width, depth and alignment as specified herein. The surface on which the culvert is to be laid shall be true to grade and alignment and shaped to accept the materials to be placed. The pipe shall be laid to the alignment and grade shown in the report but may not be placed on a bed containing frozen materials. The Contractor shall carefully place the bedding and backfill material so damage to or movement of the pipe is avoided. Backfill and cover materials shall be placed in layers not exceeding 250 mm in thickness, loose measurement. Each layer shall be thoroughly compacted before the next layer is placed. Backfill on each side of the pipe shall be placed simultaneously and at no time shall the levels on each side of the pipe differ by more than 250 mm. Where native backfill is approved to be used the material shall not contain boulders larger than 150 mm or other deleterious material. The Contractor will be required to fully restore all paved driveways with materials of similar type and depths. The Contractor shall neatly saw cut all paved driveways at a distance of 300 mm beyond the edge of the excavated trench and this shall be done immediately prior to final restoration of the paved driveway.

When an access culvert or bridge does not have to be lowered or replaced, the Contractor shall clean it to its full cross sectional area using care to avoid causing damage to it in the process. Where a pipe culvert is to be reset to a new grade, the Contractor shall carefully remove it, clean it to its full cross sectional area and replace it in the drain as specified herein. Where a culvert is to be replaced, the Contractor shall carefully remove the existing pipe from the drain, clean it to its full cross sectional area and leave it on the drain bank unless otherwise specified. Should either the property owner or the Commissioner in charge not require the salvaged pipe then the Contractor shall dispose of the pipe at the Contractors expense.

The Contractor if using a batter board system for establishing the grade of the culvert pipe, shall utilize a minimum of three batter board stakes for each culvert. The Contractor shall ensure that the batter board stakes placed on the grade stakes shall line up, this being done prior to any excavation taking place for the proposed culvert.

Where pipes are scheduled to be moved or replaced the Contractor shall confirm the new location of the culvert pipe with the owner prior to installation. Where the Contractor has excavated a culvert pipe which has been scheduled to be cleaned and reinstalled and it is found that the condition of the existing culvert pipe is not satisfactory to be reused, the Contractor shall immediately notify the Commissioner in charge who will verify the condition of the existing pipe and may instruct the Contractor to supply a new length of corrugated plastic pipe.

Where pipes are scheduled to be cleaned and flushed only, the material which is removed from the culvert pipe is to be loaded and hauled away. Over digging of the drain at the downstream end of the culvert to accommodate material flushed from a culvert pipe will not be allowed.

13.0 CUTS

The cuts as shown on the accompanying drawing are to be taken from the ground beside the stakes to the bottom of the finished drain, unless otherwise noted on the drawing.

14.0 DAMAGE TO TRAVELLED PORTION OF MUNICIPAL ROAD

The Contractor will be responsible for any damage caused by him to any portion of the municipal road system, especially to the travelled portion. When excavation work is being carried out and the excavation equipment is placed on the travelled portion of a road, the travelled portion shall be protected by having the excavation equipment placed on satisfactory timber planks or timber pads. If any parts of the travelled portion of the road is damaged by the Contractor, the Municipality shall have the right to have the necessary repair work done by its employees and the cost of all labour and materials used to carry out the repair work shall be deducted from the Contractor's contract and credited to the Municipality.

15.0 SEEDING AND MULCHING

The Contractor will be fully responsible for the restoration of all areas disturbed by his operations in the carrying out this work. The Contractor shall excavated and set aside sufficient topsoil from the trench excavation or supply additional topsoil so that he can place a minimum of 100mm in depth of topsoil over the backfilled trench as detailed on the drawings. Any depressions in any lawn caused by equipment or due to the movement of materials shall be backfilled with topsoil and satisfactorily levelled and raked in place on all lawn areas to be restored.

The Contractor shall fine grade the finished surfaces and shall apply hydroseeding and mulch. The seeding and mulching operation shall be carried out according to O.P.S.S. Spec. 572 or as amended herein and the operation shall include the supplying and placing of the following:

A)	Seed Mixture	- Creeping Red Fescue	- 50%
		- Red Top	- 20%
		- Canada Blue Grass	- 15%
		- Kentucky Blue Grass	- 15%
B)	Nurse Crop	- Oats if seeding and mulching is performed during May or June.	
		- Annual Rye Grass if seeding and mulching is performed during Sept. or Oct.	
C)	Fertilizer	- 5·20·10 mixture	
D)	Mulch	- Wood Cellulose Fibre or Straw	
E)	Adhesive	- Asphalt Emulsion if straw mulch used	
		- Liquid Polyvinyl Acetate if wood fibre mulch used	

The application rates shall be as follows:

A)	Grass Seed Mixture	- 90 lbs./acre
B)	Fertilizer	- 350 lbs./acre
C)	Nurse Crop Seed	- 55 lbs./acre
D)	Mulch	- 1300 lbs./acre if wood fibre used
		- 1" to 2" depth if straw used
E)	Adhesive	- 200 imp.gal/acre for Asphalt Emulsion
		- 205 lbs./acre for Liquid Polyvinyl Acetate

The seeding and mulching operation shall be only carried out as weather conditions permit during the months of May and June in the Spring, and September and October in the Fall. If the excavation work is carried out during the months of May and June, or September or October, the Contractor has the option of contacting the Drainage Superintendent and if the Contractor receives his written permission, the seed mixture as above specified, may be placed on the excavated side slopes by the Contractor by hand, daily, at the completion of his daily excavation operation. If the Contractor has been given written permission by the Drainage Superintendent

15.0 SEEDING AND MULCHING - Continued

to place the seeding mixture by hand daily, at the completion of his daily excavation operation, the Contractor shall be responsible to give the side slopes a rough, harrowed texture prior to placing the seed mixture.

16.0 QUARRIED ROCK

The Contractor shall place quarried rock protection at the areas indicated on the accompanying plans or as directed by the Engineer. The quarried rock shall be graded in size from a minimum size of 100 mm to a maximum size of 230 mm. The quarried rock shall be placed 300 mm in thickness on a layer of geotextile filter fabric placed on the bottom of the excavation. The filter fabric shall be "Terrafix 270-R" or equal. The Contractor shall excavate for the quarried rock so that the top of the completed quarried rock protection is level with the adjacent ground.

The Contractor shall remove all trees, brush and debris from the area on which the quarried rock is to be placed. The quarried rock shall be carefully placed by the Contractor at the locations and to the dimensions as shown on the accompanying specifications. The specified filter cloth shall be hand laid and have an overlap of 600 mm and all quarried rock that is to be placed over the filter cloth shall be carefully hand or machine placed so that it does not damage the filter cloth. The filter cloth shall extend up the sides of the trench excavated to accept the quarried rock and the quarried rock shall extend 300 mm above the top of the surface inlet pipe where applicable.

17.0 MAINTAINING FLOW AND EXISTING SEWERS

The Contractor shall support and maintain the flow and existing sewers and house connections and any other drainage works encountered in the progress of the work and at no expense to the owner. The Contractor shall obtain written approval from the engineer to stop up any drain, and if necessary, provide pumping equipment, build necessary by-passes, etc. at no expense to the owner.

18.0 SPECIAL PROVISIONS

The part of the Specifications headed "Special Provisions" which is attached hereto forms part of this Specification and is to be read with it. Where there is any difference between the requirements of this General Specification and those of the Special Provisions, the Special Provisions shall govern.

19.0 REMOVAL OF TREES

The Contractor shall reference General Specification No. 5 prior to removing any vegetation near or within the drain. Whenever practical, existing trees not scheduled for removal will be preserved. The Contractor shall exercise the utmost caution to ensure that the trees are not damaged or disturbed. All mature trees along the top of the bank of the working side of the drain shall be selectively left standing.

ATTENTION:

ALL WORK SHALL BE COMPLETED IN ACCORDANCE WITH ALL THE REQUIREMENTS OF THE OCCUPATIONAL HEALTH AND SAFETY ACT AND REGULATIONS FOR CONSTRUCTION PROJECTS, REVISED STATUTES OF ONTARIO, 1990 CHAPTER 0.1 AS AMENDED, ONTARIO REGULATION 213/91, R.R.O. 1990 REG. 834 AS ADMINISTERED BY THE ONTARIO MINISTRY OF LABOUR AND ALL SUBSEQUENT AMENDMENTS OF SAID ACT.

CAUTION:

THE LOCATION OF THE UNDERGROUND UTILITIES AS SHOWN ON THE DRAWING ARE APPROXIMATE ONLY. IT IS THE RESPONSIBILITY OF THE CONTRACTOR TO DETERMINE THE ACTUAL LOCATION OF ALL UNDERGROUND UTILITIES DURING THE CONSTRUCTION OF THE PROJECT. THE CONTRACTOR AGREES TO INDEMNIFY THE OWNER AND CROZIER BAIRD ENGINEERS AGAINST ANY CLAIMS WHICH ARISE FROM HIS ACTIONS.

SHEET SET INDEX:

SHEET NO.	SHEET TITLE
1	TITLE PAGE
2	DRAINAGE AREA
3	PROFILE 1+146 TO 1+900
4	PROFILE 1+900 TO 2+656
5	PROFILE 2+656 TO 2+848 PROFILE 0+000 TO 0+028 AND DETAILS
6	CROSS SECTIONS
7	CROSS SECTIONS

NOTE:

THE PROPERTY LINES AND DIMENSIONS SHOWN ARE BASED ON SURVEY BARS FOUND ON THE SITE AND ARE NOT BASED ON A SURVEY DRAWING PRODUCED BY AN ONTARIO LAND SURVEYOR. THE PROPERTY LINES SHOULD BE CONSIDERED AS APPROXIMATELY ONLY AND NOT A LEGAL PLAN OF SURVEY

NOTE:

CONFIRM PRESENCE OF BURIED PIPELINE PARALLEL TO NORTH RAIL BURIED 4-5' DEEP

BENCHMARK

No. 1 STA: 2+714: TOP NUT OF FIRE HYDRANT EAST OF WALKER ROAD AND NORTH TALBOT ROAD INTERSECTION
GPS ELEVATION 191.665 METRES.

No. 2 STA: 2+463: TOP NUT OF FIRE HYDRANT EAST OF BRENDAN LINE AND NORTH TALBOT ROAD INTERSECTION
GPS ELEVATION 191.740 METRES.

No. 3 STA: 2+485: TOP NUT OF FIRE HYDRANT EAST OF BRENDAN LINE AND NORTH TALBOT ROAD INTERSECTION
GPS ELEVATION 191.967 METRES.

No. 5 STA: 2+065: TOP NUT OF FIRE HYDRANT WEST OF MOYNAHAN ST. AND HENININ DR.
GPS ELEVATION 191.466 METRES.

No. 6 STA: 1+563 TOP NUT OF FIRE HYDRANT NEAR THE WEST END OF DELDUCA DR.
GPS ELEVATION 191.117 METRES.

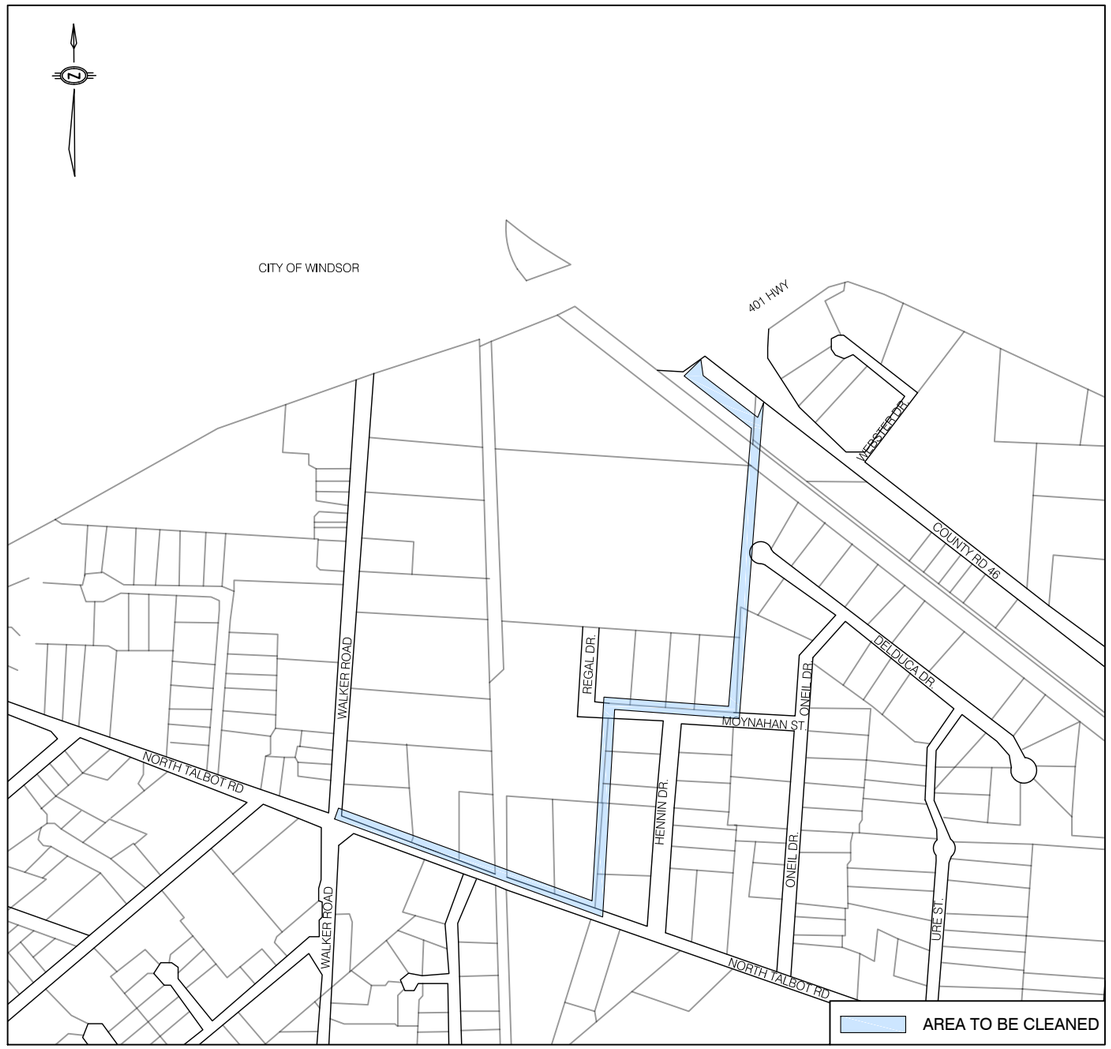

KEY PLAN
SCALE: N.T.S

BAIRD|AE
architecture + engineering

27 PRINCESS STREET, SUITE #102
LEAMINGTON, ONTARIO
N8H 2X8

1000 - 267 PELISSIER STREET,
WINDSOR, ONTARIO
N9A 4K4.

PROJECT TITLE:
REPAIR AND IMPROVEMENT TO THE 7TH CONCESSION DRAIN
TOWN OF TECUMSEH

PAGE TITLE:
TITLE PAGE

LICENSED PROFESSIONAL ENGINEER
D. A. JOUDREY
PROVINCE OF ONTARIO

DON J. JOUDREY, P.ENG.

DRAWN BY:	SCALE:	DATE:
D.B.	AS NOTED	FEB. 07, 2017
CHCK'D BY:	SHEET No. :	PROJECT No. :
D.A.J./H.P.P.	1 OF 7	14-105

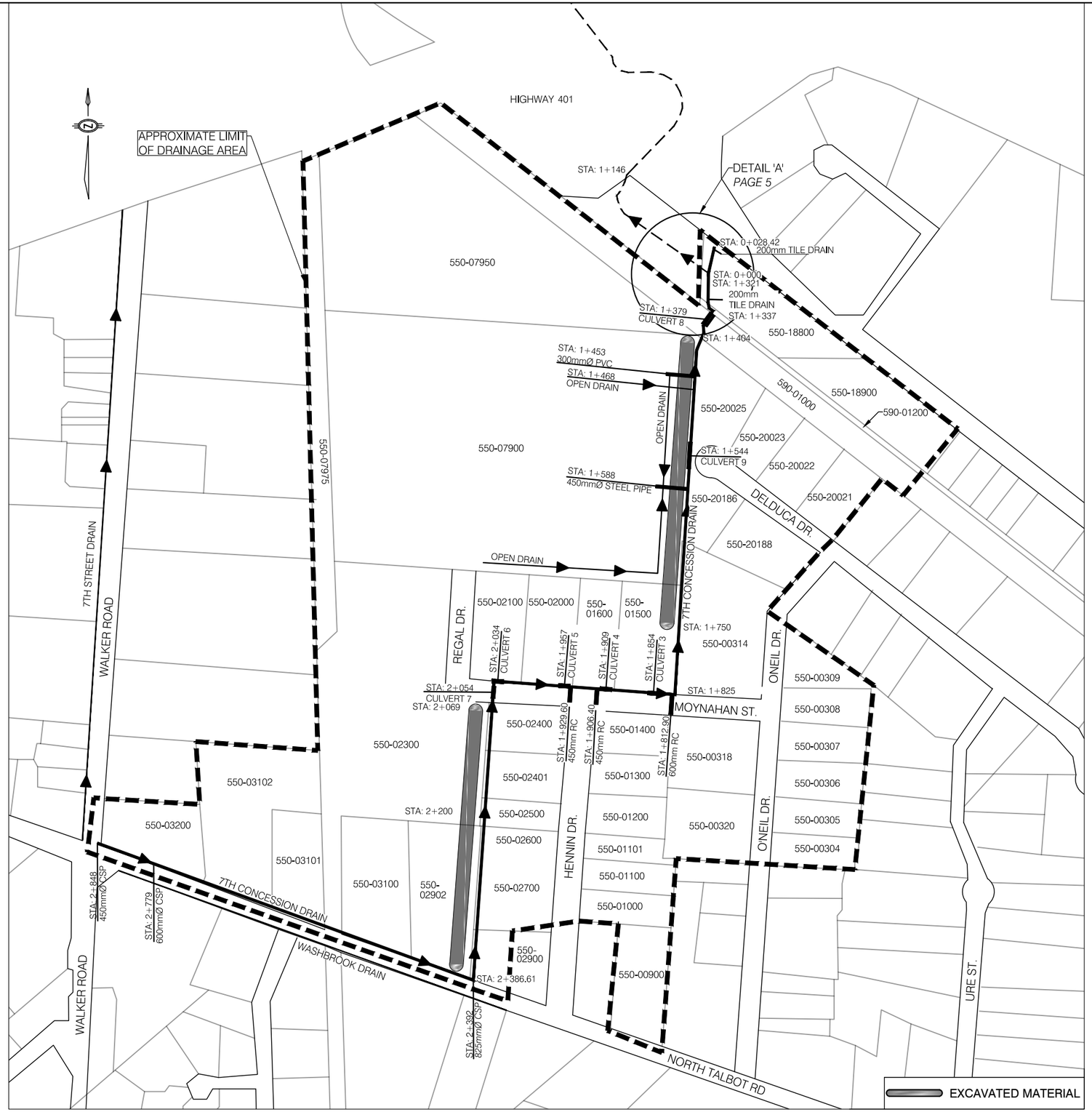

DRAINAGE AREA PLAN

SCALE: N.T.S.

Roll No.	Owner
550-00304	Greycliffe Consultants
550-00305	KBC Tools Inc.
550-00306	997103 Ontario Ltd.
550-00307	Linda Jahn and Cheryl Jahn
550-00308	KFJ Holdings Ltd.
550-00309	Filippo Liburdi
550-00314	Hero's Fountain Ltd.
550-00318	Linda Jahn and Cheryl Jahn
550-00320	Timothy Capital Corp.
550-00900	Generation Development Contractors Inc.
550-01000	Fraven Management Ltd.
550-01100	TJ Watson Land Development Inc.
550-01101	Peter Macera
550-01200	Sernacon Holdings Inc.
550-01300	1061175 Ontario Ltd.
550-01400	Electra-Tech Manufacturing Inc.
550-01500	SGM Real Estate Holdings ULC
550-01600	Adine Builders Ltd.
550-02000	Gail Rodzik and Pamela Rodzik
550-02100	Gail Rodzik and Pamela Rodzik
550-02300	1147048 Ontario Ltd.
550-02400	Grande Line Estates Ltd.
550-02401	T.C.T.T. Investment Group
550-02500	ARC Boiler Repair Ltd.
550-02600	Fraven Management Ltd.
550-02700	Fraven Management Ltd.
550-02900	Bolzano Tool and Die Company Ltd.
550-02902	Morbella Holdings Ltd.
550-03100	Daniela Calsavara
550-03101	Generation Development Contractors Inc.
550-03102	ITW Canada Management Company
550-03200	Morton Wholesale Ltd. (Corporation)
550-07900	1078398 Ontario Ltd.
550-07950	803102 Ontario Ltd.
550-07975	1233831 Ontario Ltd.
550-18800	905364 Ontario Ltd.
550-18900	401 Mack Ltd.
550-20021	Calframax Holdings Inc.
550-20022	Paul Cesidio DiGiovanni
550-20023	Paul Cesidio DiGiovanni
550-20025	Paul Cesidio DiGiovanni
550-20186	2376238 Ontario Ltd.
550-20188	Hero's Fountain Ltd.
590-01000	Detroit River Tunnel Company
590-01200	Town of Tecumseh

PARCEL INFORMATION

PROJECT TITLE:
REPAIR AND IMPROVEMENT TO THE 7TH CONCESSION DRAIN
TOWN OF TECUMSEH

SHEET TITLE:	DRAWN BY:	SCALE:	DATE:
DRAINAGE AREA	D.B.	AS NOTED	FEB. 07, 2017
	CHCK'D BY: D.A.J./H.P.P.	SHEET No. : 2 OF 7	PROJECT No. : 14-105

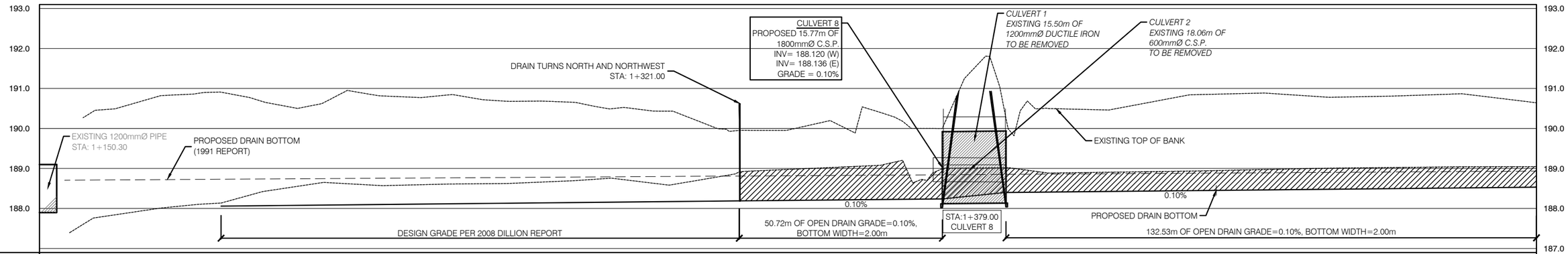

STATIONS	1+160	1+180	1+200	1+220	1+240	1+260	1+280	1+300	1+320	1+340	1+360	1+380	1+400	1+420	1+440	1+460	1+480	1+500	1+520
EXISTING DRAIN BOTTOM	187.769	188.047	188.374	188.635	188.591	188.622	188.698	188.623	188.874	189.008	189.169	189.015	188.889	188.916	188.949	188.991	189.021	189.042	189.047
PROPOSED DRAIN BOTTOM										188.209	188.229	188.326	188.413	188.433	188.453	188.473	188.493	188.513	188.533
CULVERT INVERT	1+145.81 187.899											1+371.57 188.120 / 1+387.47 188.136							

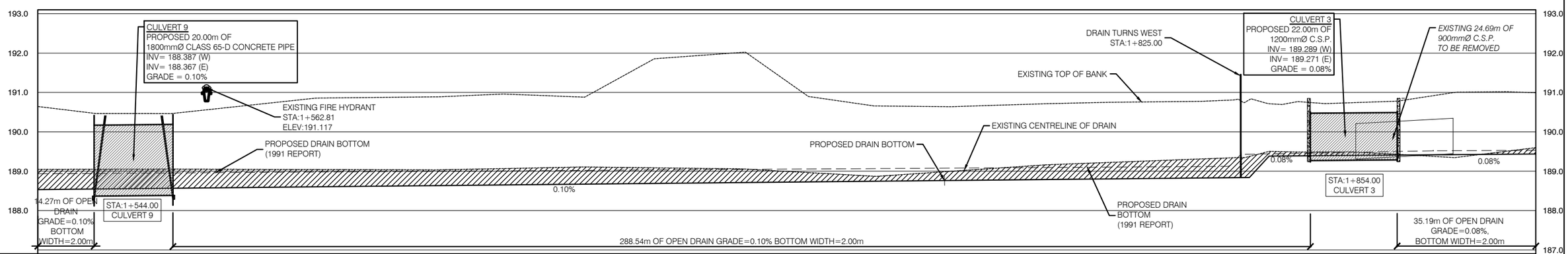

STATIONS	1+540	1+560	1+580	1+600	1+620	1+640	1+660	1+680	1+700	1+720	1+740	1+760	1+780	1+800	1+820	1+840	1+860	1+880	1+900
EXISTING DRAIN BOTTOM	189.050	189.051	189.045	189.039	189.033	189.071	189.105	189.082	189.050	188.940	188.919	189.055	189.178	189.254	189.330	189.487	189.455	189.352	189.598
PROPOSED DRAIN BOTTOM	188.553	188.573	188.593	188.613	188.633	188.653	188.673	188.693	188.713	188.733	188.753	188.773	188.793	188.813	188.833	189.389	189.405	189.420	189.436
CULVERT INVERT	1+534.27 188.367 / 1+554.27 188.387															1+842.81 189.271 / 1+864.81 189.289			

PROJECT TITLE:

REPAIR AND IMPROVEMENT TO THE 7TH CONCESSION DRAIN

TOWN OF TECUMSEH

SHEET TITLE:	DRAWN BY:	SCALE:	DATE:
PROFILE 1+146 TO 1+900	D.B.	HOR: 1:1000 VER: 1:100	FEB. 07, 2017
	CHCK'D BY: D.A.J./H.P.P.	SHEET No. : 3 OF 7	PROJECT No. : 14-105

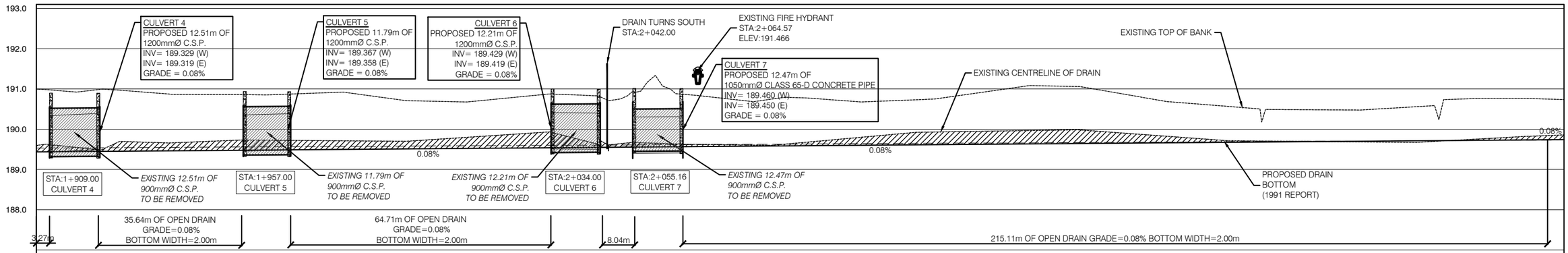

STATIONS	1+900	1+920	1+940	1+960	1+980	2+000	2+020	2+040	2+060	2+080	2+100	2+120	2+140	2+160	2+180	2+200	2+220	2+240	2+260	2+280
EXISTING DRAIN BOTTOM	189.598	189.664	189.687	189.726	189.710	189.753	189.884	189.599	189.632	189.605	189.753	189.926	189.957	189.980	189.834	189.712	189.693	189.675	189.764	189.859
PROPOSED DRAIN BOTTOM	189.436	189.452	189.468	189.484	189.500	189.516	189.532	189.548	189.564	189.580	189.597	189.613	189.629	189.645	189.661	189.677	189.693	189.709	189.725	189.741
CULVERT INVERT	1+903.27 189.319 1+915.78 189.329			1+951.48 189.358 1+963.27 189.367				2+028.05 189.419 2+040.25 189.429	2+048.35 189.450 2+060.83 189.460											

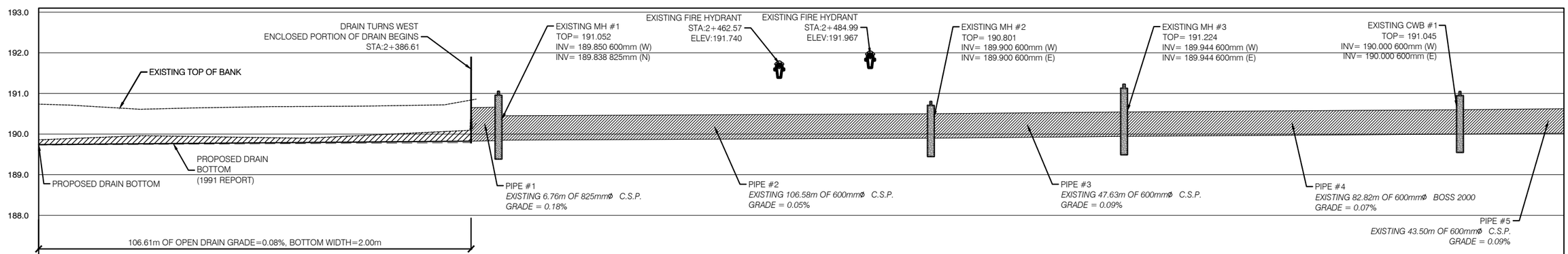

STATIONS	2+280	2+300	2+320	2+340	2+360	2+380	2+400	2+420	2+440	2+460	2+480	2+500	2+520	2+540	2+560	2+580	2+600	2+620	2+640	2+656
EXISTING DRAIN BOTTOM	189.859	189.939	189.938	189.907	189.967	190.063														
PROPOSED DRAIN BOTTOM	189.741	189.757	189.773	189.789	189.805	189.821														
MANHOLE INVERT							189.825 189.838 189.850					189.900 189.900		189.944 189.944				190.000 190.000		

PROJECT TITLE:

REPAIR AND IMPROVEMENT TO THE 7TH CONCESSION DRAIN

TOWN OF TECUMSEH

SHEET TITLE:

PROFILE 1+900 TO 2+656

DRAWN BY:	SCALE:	DATE:
D.B.	HOR: 1:1000 VER: 1:100	FEB. 07, 2017
CHCK'D BY:	SHEET No. :	PROJECT No. :
D.A.J./H.P.P.	4 OF 7	14-105

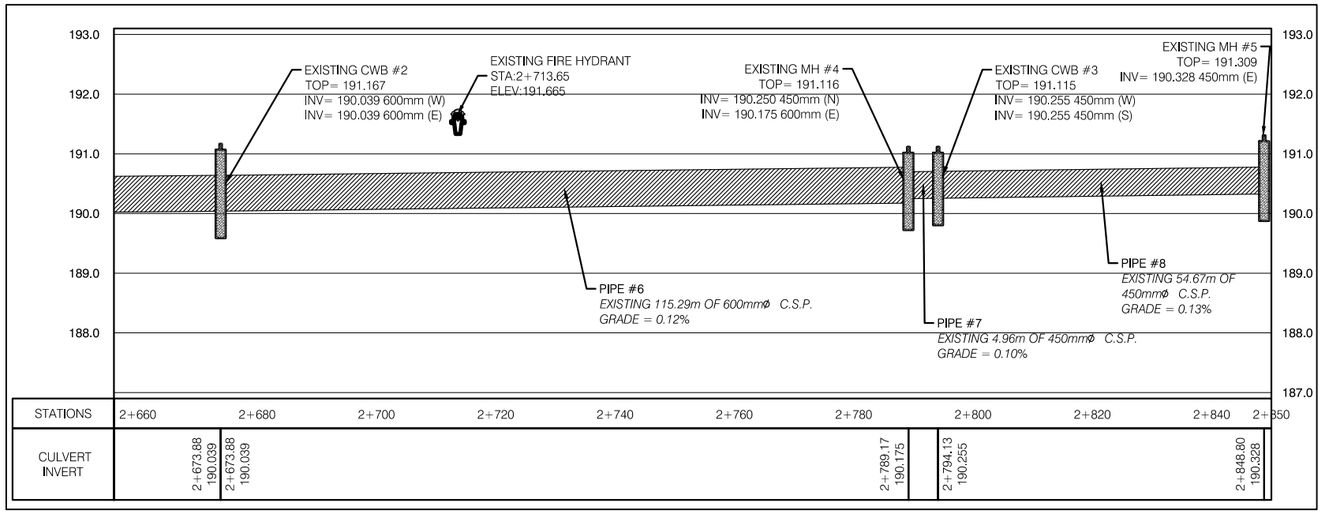

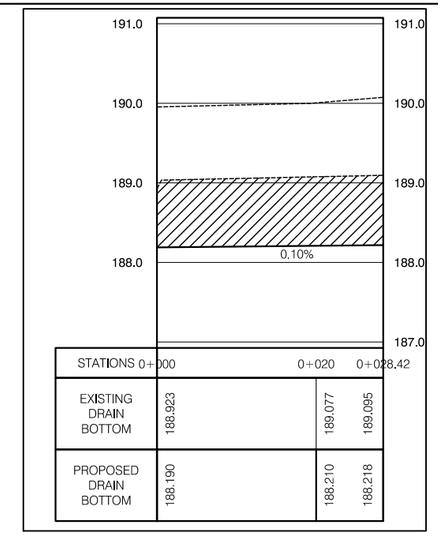

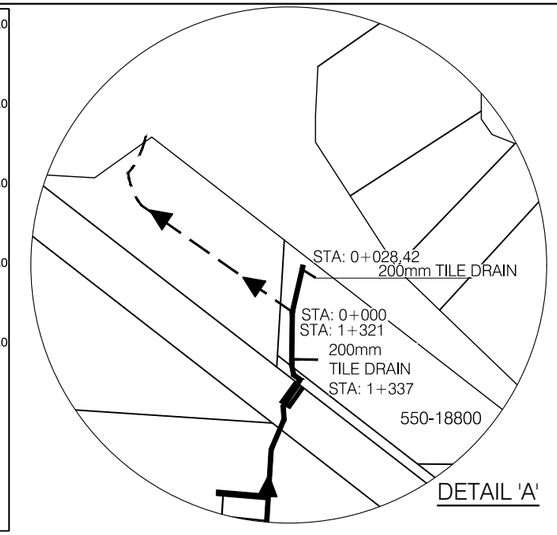

DETAIL 'A'

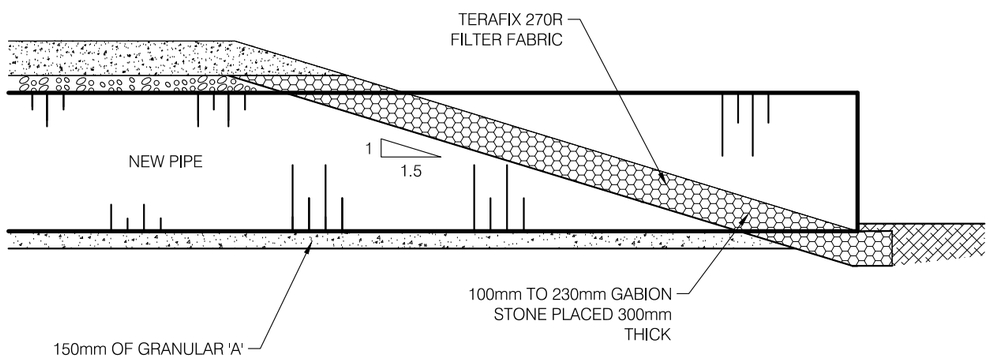

TYPICAL SECTION OF GABION STONE END PROTECTION

SCALE: 1:50

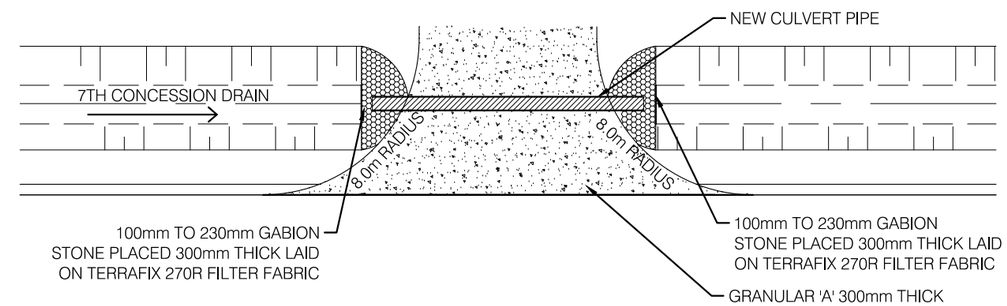

TYPICAL GABION STONE END PROTECTION PLAN VIEW

SCALE: 1:50

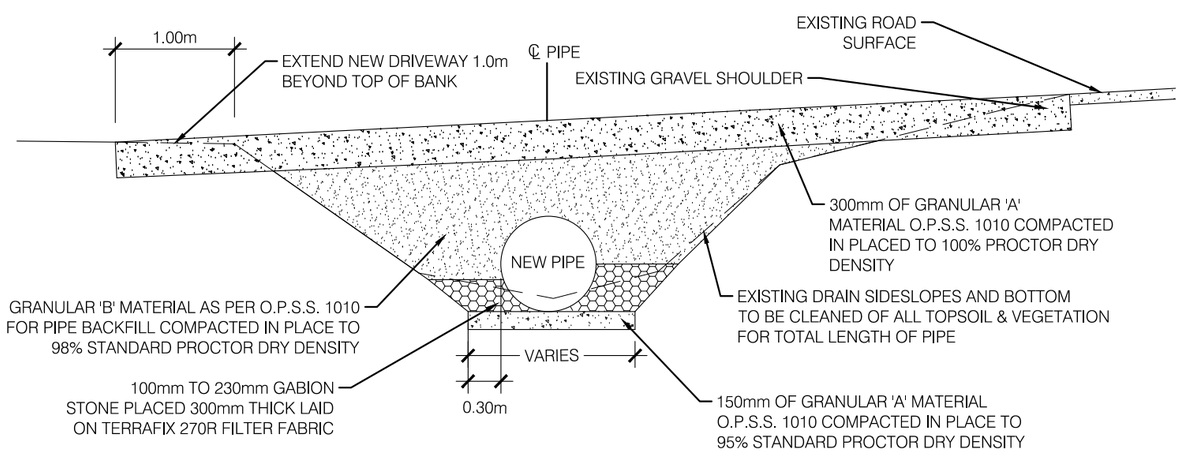

TYPICAL END OF CULVERT SECTION

SCALE: 1:50

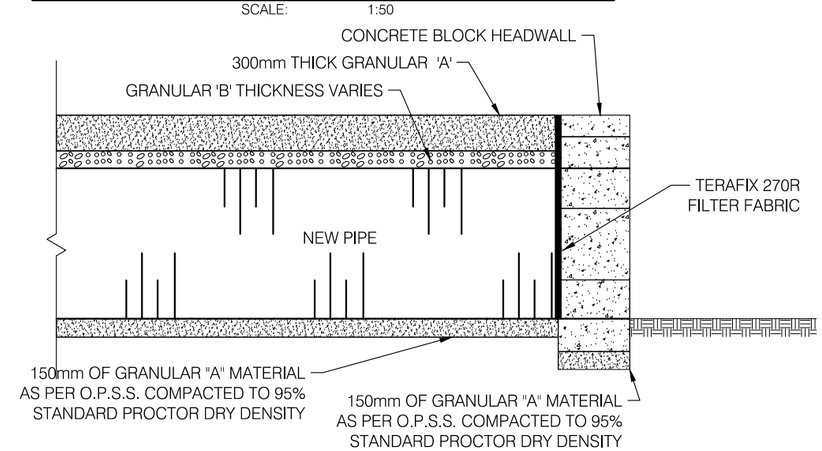

TYPICAL END SECTION

SCALE: 1:25

PROJECT TITLE:

REPAIR AND IMPROVEMENT TO THE 7TH CONCESSION DRAIN

TOWN OF TECUMSEH

SHEET TITLE:	DRAWN BY:	SCALE:	DATE:
PROFILE 2+656 TO 2+848 PROFILE 0+000 TO 0+028	D.B.	AS NOTED	FEB. 07, 2017
	CHCK'D BY: D.A.J./H.P.P.	SHEET No. : 5 OF 7	PROJECT No. : 14-105

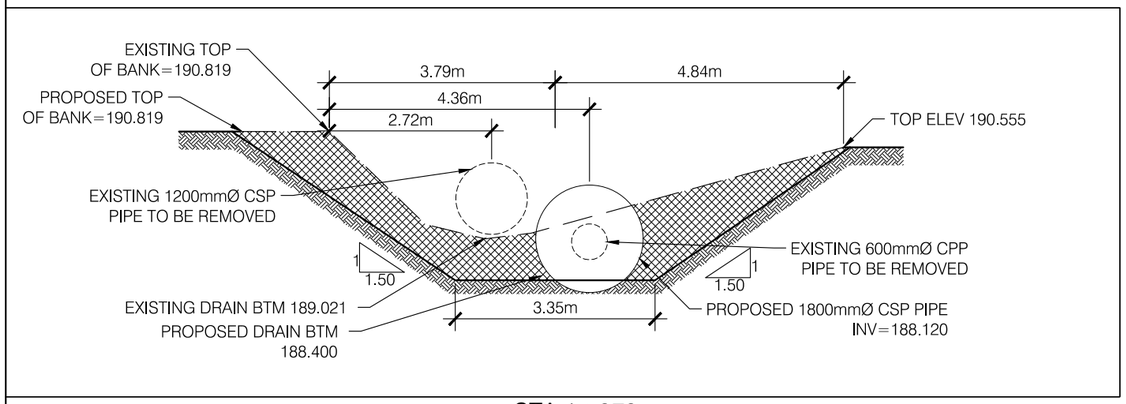

STA 1+379
SCALE: 1:100

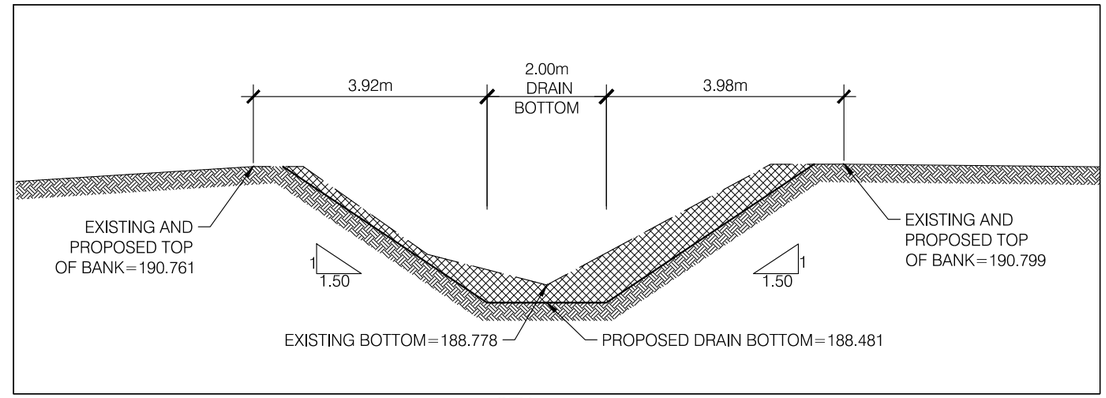

STA 1+468
SCALE: 1:100

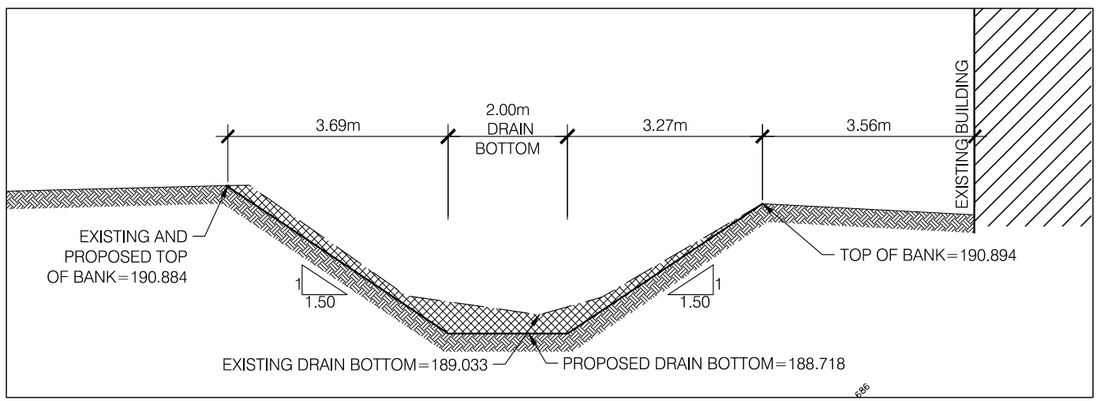

STA 1+620
SCALE: 1:100

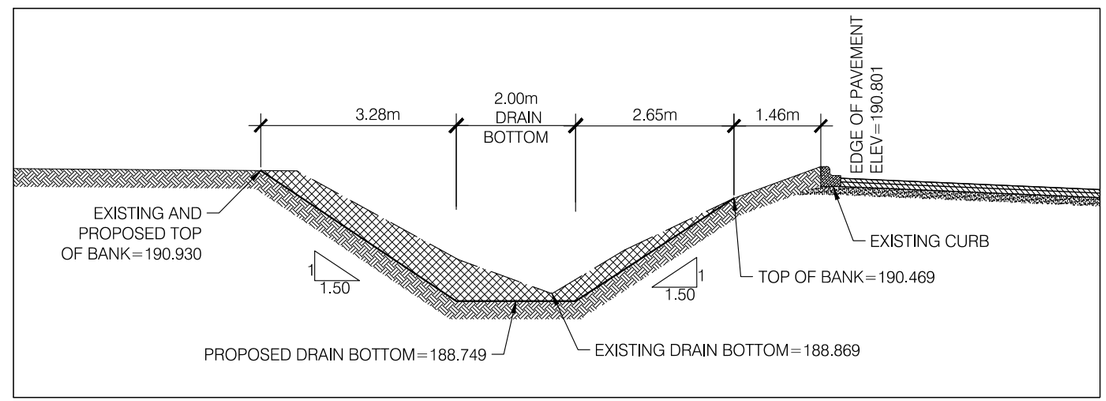

STA 1+732
SCALE: 1:100

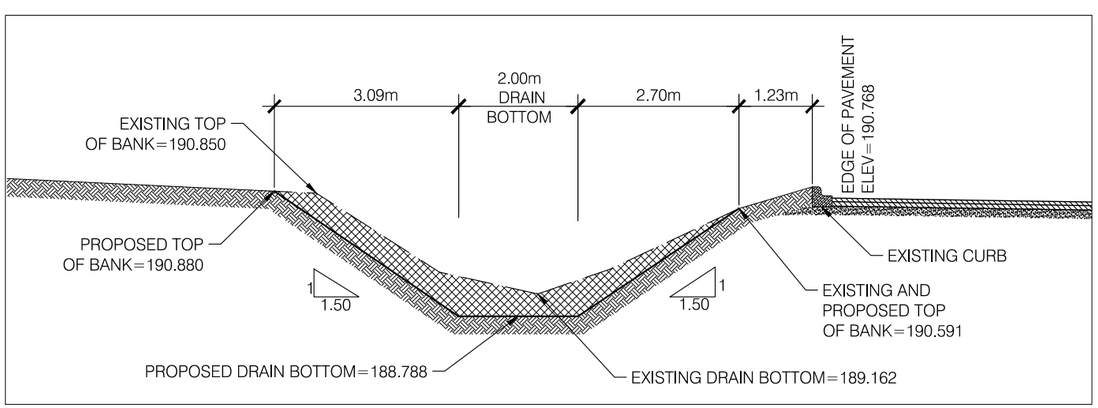

STA 1+775
SCALE: 1:100

PROJECT TITLE:
REPAIR AND IMPROVEMENT TO THE 7TH CONCESSION DRAIN
TOWN OF TECUMSEH

SHEET TITLE:	DRAWN BY:	SCALE:	DATE:
CROSS SECTIONS	D.B.	AS NOTED	FEB. 07, 2017
	CHCK'D BY: D.A.J./H.P.P.	SHEET No. : 6 OF 7	PROJECT No. : 14-105

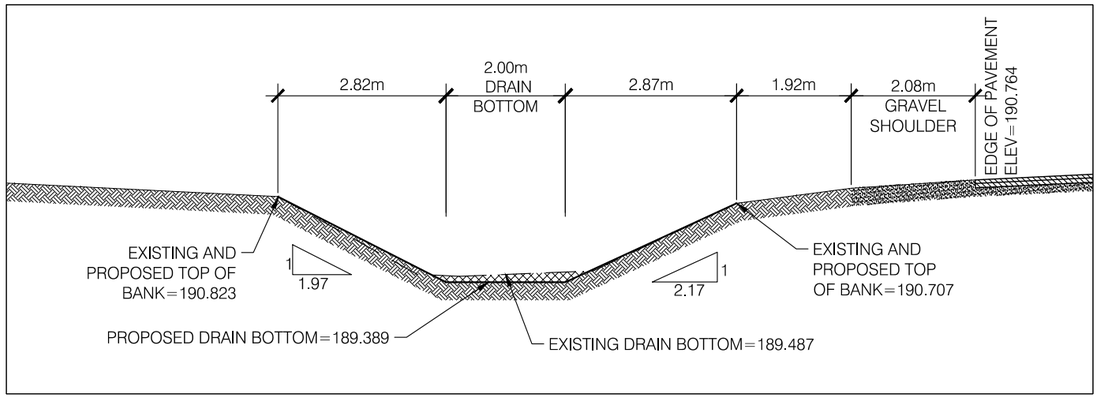

STA 1+840
SCALE: 1:100

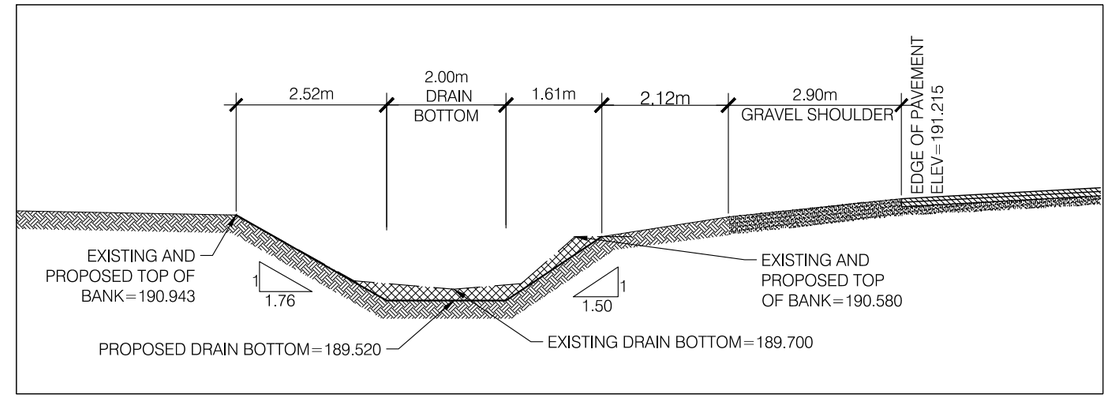

STA 1+992
SCALE: 1:100

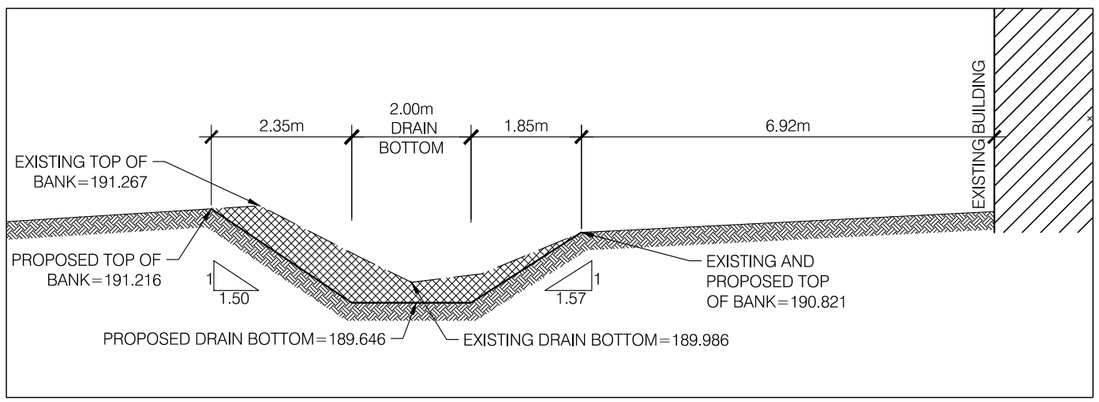

STA 2+159
SCALE: 1:100

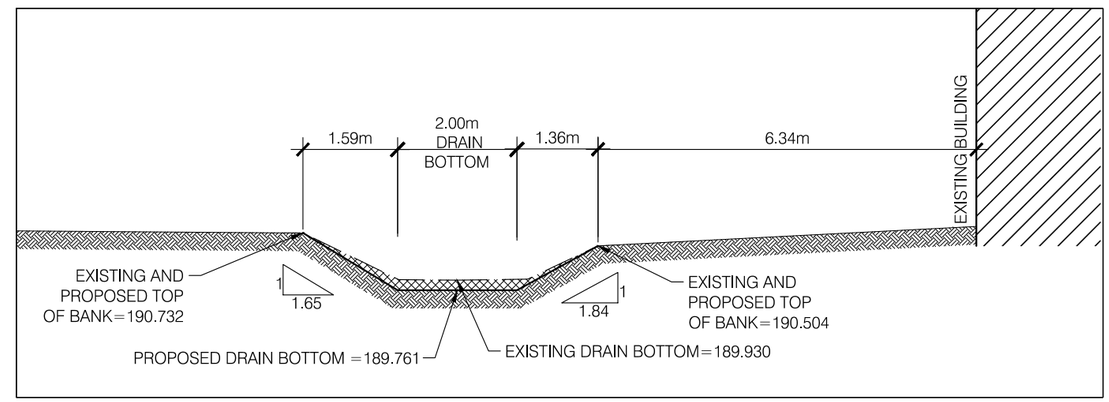

STA 2+293.12
SCALE: 1:100

PROJECT TITLE: REPAIR AND IMPROVEMENT TO THE 7TH CONCESSION DRAIN TOWN OF TECUMSEH			
SHEET TITLE: CROSS SECTIONS	DRAWN BY: D.B.	SCALE: AS NOTED	DATE: FEB. 07, 2017
	CHCK'D BY: D.A.J./H.P.P.	SHEET No. : 7 OF 7	PROJECT No. : 14-105

THE CORPORATION OF THE TOWN OF TECUMSEH

BY-LAW 2017-16

Being a By-law to amend By-law No. 2016-82, a bylaw which prescribes tariffs of administrative fees and charges for the Town of Tecumseh for the year 2017

WHEREAS Section 391 of *The Municipal Act*, 2001 S.O. 2001, c. M.25 authorizes a municipality to impose fees or charges on persons for services or activities provided or done by or on behalf of it; for costs payable by it for services or activities provided or done by or on behalf of any other municipality or any local board; and for the use of its property including property under its control;

AND WHEREAS *The Municipal Act*, 2001 S.O. 2001, c. M.25 grants a municipality the power to pass by-laws that impose specific fees for licensing, services, permits and other reasons;

AND WHEREAS Section 69 of *The Planning Act*, R.S.O. 1990, c.P.13 grants a Council of a municipality, by by-law, and a planning board, by resolution, authority to establish a tariff of fees for the processing of applications made in respect of planning matters;

AND WHEREAS Section 446(1) of *The Municipal Act 2001* S.O. 2001, c. M.25 authorizes a municipality under this or any other Act or under a bylaw under this or any other Act to direct or require a person to do a matter or thing, the municipality may also provide that, in default of it being done by the person directed or required to do it, the matter or thing shall be done at the person's expense;

AND WHEREAS the Council of The Corporation of the Town of Tecumseh (Corporation) adopted By-law 2016-82 to prescribe administrative fees and charges for the year 2017;

AND WHEREAS the Corporation is desirous of amending Schedule B of By-law 2016-82;

NOW THEREFORE THE COUNCIL OF THE CORPORATION OF THE TOWN OF TECUMSEH ENACTS AS FOLLOWS:

1. That Schedule B to By-law No. 2016-82 is hereby repealed and replaced with Schedule B as appended hereto as Appendix A to By-law No. 2017-16;

2. That any by-law inconsistent with this by-law is hereby repealed;

3. That this by-law shall come into force and take effect on the date of passing.

READ a first, second and third time and finally passed this 14th day of March, 2017.

Gary McNamara, Mayor

Laura Moy, Clerk

Appendix A
Schedule B to By-law 2016-82

Fire Department

TYPE OF FEE	2017 FEES	2016 FEES	HST
Property Inspection by request; Determination of occupancy; New construction (Ontario Building Code); Licensing (Liquor Licensing Board of Ontario); Change in property use			
a) Sq. Ft from 0 to 2,500	$ 66.15	$ 65.00	Y
b) Sq. Ft from 2,501 to 5,000	$ 96.68	$ 95.00	Y
c) Sq. Ft. from 5,001 to 10,000	$ 142.52	$ 140.00	Y
d) Sq. Ft. from 10,001 to 20,000	$ 254.51	$ 250.00	Y
e) Sq. Ft. from 20,001 and over	$ 381.77	$ 375.00	Y
Fire assistance for private standby beyond normal fire protection at Commercial or industrial premises: per hour per manned apparatus	$ 427.57	$ 420.00	Y
Risk & Safety Management Plan Review - Level 1 Propane Facility	$ 218.85	$ 215.00	Y
Risk & Safety Management Plan Review - Level 2 Propane Facility **** Note 1**	$ 1,669.51	$ 1,640.00	
Engineering Peer Review of RSMP Submits	at cost		
Daycare Inspection License approval	$ 66.15	$ 65.00	Y
Daycare Inspection License approval follow-up	$ 25.44	$ 25.00	Y
Fire Inspection of apartments, boarding and lodging houses made under retrofit apartments in single family dwelling			
a) Owner's Request	$ 254.51	$ 250.00	Y
b) From Complaint	$ 381.77	$ 375.00	Y
c) Orders Issued	$ 381.77	$ 375.00	Y
Fire flow testing private hydrants or request for flow test information	$ 66.15	$ 65.00	Y
Fire Scene photographs on disc	$ 9.16	$ 9.00	Y
Room Rental	$ 137.43	$ 135.00	Y
Training Tower Rental			Y
a) Building rental	$ 325.75	$ 320.00	Y
b) Staffing (Other duties rate)	2 FF	2 FF	Y
Smoke House Rental			
a) Building rental	$ 427.52	$ 420.00	Y
b) Staffing (Other duties rate)	2 FF	2 FF	Y
c) Materials	$ 106.86	$ 105.00	Y
Confined Space Rental			
a) Building rental	$ 432.65	$ 425.00	Y
b) Staffing (Other duties rate)	2 FF	2 FF	Y
Fire Vehicle Standby with 4 Firefighters	$ 450.00		Y
Use of Firehall for Carwash	$ 25.00		Y
Lock Box	$ 199.12		Y

UNFINISHED REGULAR COUNCIL BUSINESS

	Meeting Date	Resolution	Subject	Action/Direction	Depart.	Status/Action Taken
5/16	Nov 8, 2016 Feb 14, 2017	RCM 390/16	Traffic Study	That a traffic count be conducted for the intersection of Cada Street and St. Gregory's Road to determine if it warrants the installation of a crosswalk. A request is made that the traffic count should not take place prior to the soccer season as those numbers ought to be incorporated.	PWES	Scheduled for Spring 2017

Meeting Date: March 14, 2017

THE CORPORATION OF THE TOWN OF TECUMSEH

BY-LAW NUMBER 2017-17

Being a by-law to confirm the proceedings of the
March 14, 2017 regular meeting of the Council of
The Corporation of the Town of Tecumseh

WHEREAS pursuant to Section 5(1) of the *Municipal Act, 2001*, S.O. 2001, c.25 as amended, the powers of a municipality shall be exercised by its Council; and

WHEREAS pursuant to Section 5(3) of the *Municipal Act, 2001*, S.O. 2001, c.25 as amended, a municipal power, including a municipality's capacity, rights, powers and privileges under Section 8 of the *Municipal Act, 2001*, S.O. 2001, c.25 as amended, shall be exercised by by-law unless the municipality is specifically authorized to do otherwise; and

WHEREAS it is deemed expedient that the proceedings of the Council of The Corporation of the Town of Tecumseh at this Session be confirmed and adopted by by-law.

NOW THEREFORE THE COUNCIL OF THE CORPORATION OF THE TOWN OF TECUMSEH ENACTS AS FOLLOWS:

1. **THAT** the actions of the Council of The Corporation of the Town of Tecumseh in respect of all recommendations in reports and minutes of committees, all motions and resolutions and all other action passed and taken by the Council of The Corporation of the Town of Tecumseh, documents and transactions entered into during the **March 14, 2017,** meeting of Council, are hereby adopted and confirmed, as if the same were expressly embodied in this By-law.

2. **THAT** the Mayor and proper officials of The Corporation of the Town of Tecumseh are hereby authorized and directed to do all the things necessary to give effect to the action of the Council of The Corporation of the Town of Tecumseh during the said **March 14, 2017,** meeting referred to in paragraph 1 of this By-law.

3. **THAT** the Mayor and the Clerk are hereby authorized and directed to execute all documents necessary to the action taken by this Council as described in Section 1 of this By-law and to affix the Corporate Seal of The Corporation of the Town of Tecumseh to all documents referred to in said paragraph 1.

Read a first, second and third time and finally passed this 14th day of March, 2017.

_____
Gary McNamara, Mayor

"SEAL"

_____
Laura Moy, Clerk